EN

PILE
STACKING RAPID DOOR

USER'S AND INSTALLER'S MANUAL

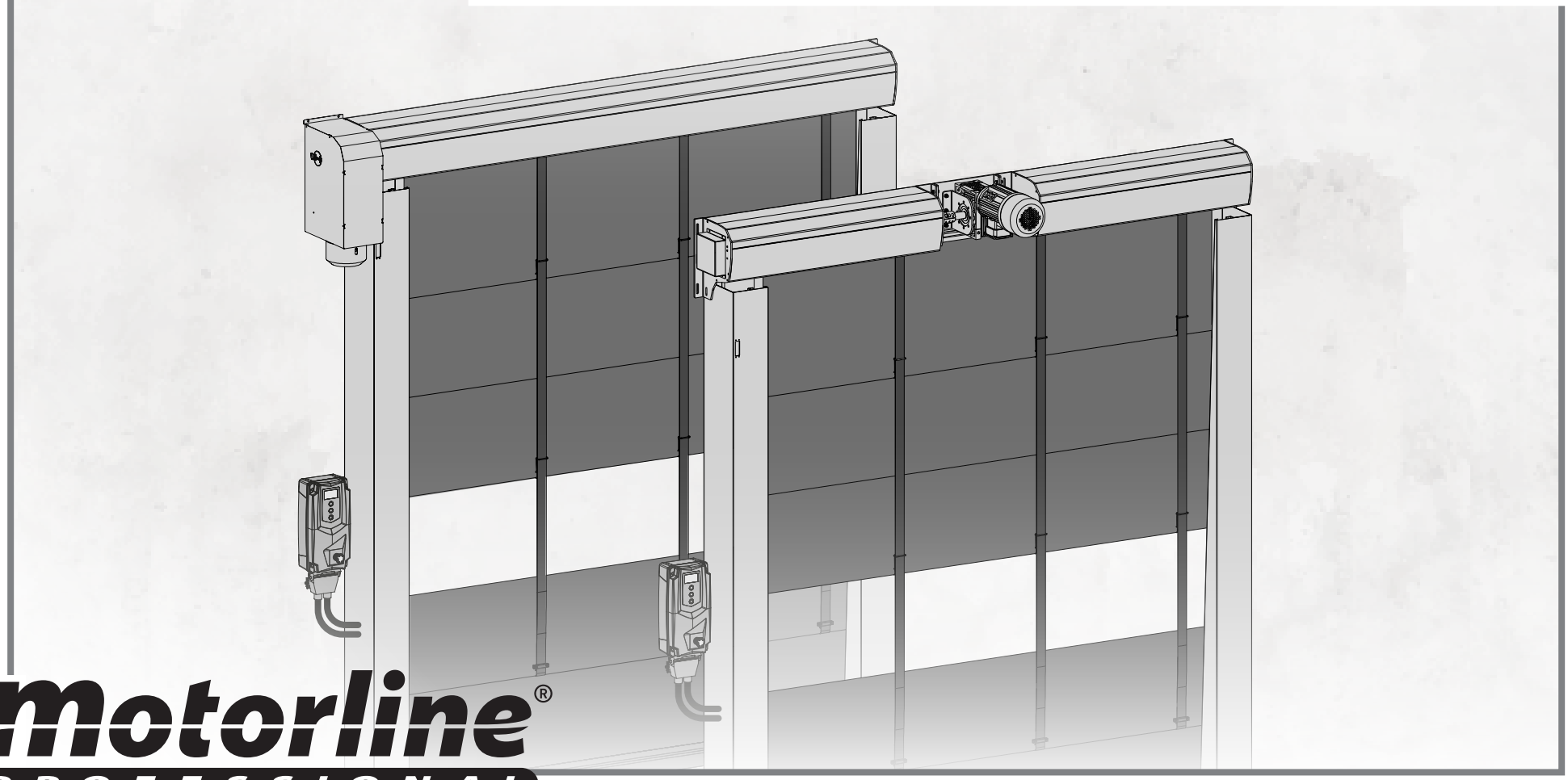

Motorline® PROFESSIONAL

v3.2
REV. 12/2025

00. CONTENT

INDEX

01. SAFETY INSTRUCTIONS
STANDARDS TO FOLLOW 1B

02. PACKAGE
INSIDE THE PACKAGE 4A

03. AUTOMATION
TECHNICAL CHARACTERISTICS 4B
DIMENSIONS (UP TO 6500 MM) - NORMAL KIT 5A
DIMENSIONS (UP TO 6500 MM) - TUNNEL KIT 5B
DIMENSIONS (GREATER THAN 6500 MM) - NORMAL KIT 6A
DIMENSIONS (GREATER THAN 6500 MM) - TUNNEL KIT 6B

04. INSTALLATION
INSTALLATION MAP - SIMPLE SAFE PROFILE 7
INSTALLATION MAP - DOUBLE SAFE PROFILE 8
FIXING THE SIMPLE SAFE PROFILE 9A
FIXING THE DOUBLE SAFE PROFILE 10A
LATERAL GUIDES - SIMPLE SAFE PROFILE 11A
LATERAL GUIDES - DOUBLE SAFE PROFILE 12A
CONTROL BOARD AND PHOTOCELLS 13
TARPAULIN ASSEMBLY 14
TARPAULIN ASSEMBLY IN THE SAFE PROFILE 15A

05. MAINTENANCE
MANUAL OPENING/CLOSING 17
LIMIT-SWITCHES ADJUSTMENT 18
TASKS AND FREQUENCY OF MAINTENANCE 19

01. SAFETY INSTRUCTIONS

CE	This product is certified in accordance with European Community (EC) safety standards.
RoHS	This product complies with Directive 2011/65/EU of the European Parliament and of the Council, of 8 June 2011, on the restriction of the use of certain hazardous substances in electrical and electronic equipment and with Delegated Directive (EU) 2015/863 from Commission.
	(Applicable in countries with recycling systems). This marking on the product or literature indicates that the product and electronic accessories (eg. Charger, USB cable, electronic material, controls, etc.) should not be disposed of as other household waste at the end of its useful life. To avoid possible harm to the environment or human health resulting from the uncontrolled disposal of waste, separate these items from other types of waste and recycle them responsibly to promote the sustainable reuse of material resources. Home users should contact the dealer where they purchased this product or the National Environment Agency for details on where and how they can take these items for environmentally safe recycling. Business users should contact their vendor and check the terms and conditions of the purchase agreement. This product and its electronic accessories should not be mixed with other commercial waste.
	This marking indicates that batteries should not be discarded like other household waste at the end of their useful life. Batteries must be delivered to selective collection points for recycling.
	The different types of packaging (cardboard, plastic, etc.) must be subject to selective collection for recycling. Separate packaging and recycle it responsibly.
	This marking indicates that the product and electronic accessories (eg. charger, USB cable, electronic material, controls, etc.) are susceptible to electric shock by direct or indirect contact with electricity. Be cautious when handling the product and observe all safety procedures in this manual.

01. SAFETY INSTRUCTIONS

GENERAL WARNINGS

- This manual contains very important safety and usage information. Read all instructions carefully before beginning the installation/usage procedures and keep this manual in a safe place that it can be consulted whenever necessary.
- This product is intended for use only as described in this manual. Any other enforcement or operation that is not mentioned is expressly prohibited, as it may damage the product and put people at risk causing serious injuries.
- This manual is intended firstly for specialized technicians, and does not invalidate the user's responsibility to read the "User Norms" section in order to ensure the correct functioning of the product.
- The installation and repair of this product may be done by qualified and specialized technicians, to assure every procedure are carried out in accordance with applicable rules and norms. Nonprofessional and inexperienced users are expressly prohibited of taking any action, unless explicitly requested by specialized technicians to do so.
- Installations must be frequently inspected for unbalance and the wear signals of the cables, springs, hinges, wheels, supports and other mechanical assembly parts.
- Do not use the product if it is necessary repair or adjustment is required.
- When performing maintenance, cleaning and replacement of parts, the product must be disconnected from power supply. Also including any operation that requires opening the product cover.
- The use, cleaning and maintenance of this product may be carried out by any persons aged eight years old and over and persons whose physical, sensorial or mental capacities are lower, or by persons without any knowledge of the product, provided that these are supervision and instructions given by persons with experienced in terms of usage of the product in a safe manner and who understands the risks and dangers involved.
- Children shouldn't play with the product or opening devices to avoid the motorized door or gate from being triggered involuntarily.
- If the power cable is damaged, it must be replaced by the manufacturer, after-sales service or similarly qualified personnel to avoid danger.
- The device must be disconnected from the electrical network when removing the battery.
- Ensure that blocking is avoided between the actuated part and its fixed parts due to the opening movement of the actuated part.

WARNINGS FOR TECHNICIANS

- Before beginning the installation procedures, make sure that you have all the devices and materials necessary to complete the installation of the product.
- You should note your Protection Index (IP) and operating temperature to ensure that is suitable for the installation site.
- Provide the manual of the product to the user and let them know how to handle it in an emergency.
- If the automatism is installed on a gate with a pedestrian door, a door locking mechanism must be installed while the gate is in motion.
- Do not install the product "upside down" or supported by elements do not support its weight. If necessary, add brackets at strategic points to ensure the safety of the automatism.
- Do not install the product in explosive site.
- Safety devices must protect the possible crushing, cutting, transport and danger areas of the motorized door or gate.
- Verify that the elements to be automated (gates, door, windows, blinds, etc.) are in perfect function, aligned and level. Also verify if the necessary mechanical stops are in the appropriate places.
- The control board must be installed on a safe place of any fluid (rain, moisture, etc.), dust and pests.
- You must route the various electrical cables through protective tubes, to protect them against mechanical exertions, essentially on

the power supply cable. Please note that all the cables must enter the control board from the bottom.

- If the automatism is to be installed at a height of more than 2,5m from the ground or other level of access, the minimum safety and health requirements for the use of work equipment workers at the work of Directive 2009/104/CE of European Parliament and of the Council of 16 September 2009.
- Attach the permanent label for the manual release as close as possible to the release mechanism.
- Disconnect means, such as a switch or circuit breaker on the electrical panel, must be provided on the product's fixed power supply leads in accordance with the installation rules.
- If the product to be installed requires power supply of 230Vac or 110Vac, ensure that connection is to an electrical panel with ground connection.
- The product is only powered by low voltage satefy with control board (only at 24V motors).
- Parts/products weighing more than 20 kg must be handled with special care due to the risk of injury. It is recommended to use suitable auxiliary systems for moving or lifting heavy objects.
- Pay special attention to the danger of falling objects or uncontrolled movement of doors/gates during the installation or operation of this product.

WARNINGS FOR USERS

- Keep this manual in a safe place to be consulted whenever necessary.
- If the product has contact with fluids without being prepared, it must immediately disconnect from the power supply to avoid short circuits, and consult a specialized technician.
- Ensure that technician has provided you the product manual and informed you how to handle the product in an emergency.
- If the system requires any repair or modification, unlock the automatism, turn off the power and do not use it until all safety conditions have been met.
- In the event of tripping of circuits breakers of fuse failure, locate the malfunction and solve it before resetting the circuit breaker or replacing the fuse. If the malfunction is not repairable by consult this manual, contact a technician.
- Keep the operation area of the motorized gate free while the gate in in motion, and do not create strength to the gate movement.
- Do not perform any operation on mechanical elements or hinges if the product is in motion.

RESPONSABILITY

- Supplier disclaims any liability if:
  - Product failure or deformation result from improper installation use or maintenance!
  - Safety norms are not followed in the installation, use and maintenance of the product.
  - Instructions in this manual are not followed.
  - Damaged is caused by unauthorized modifications
  - In these cases, the warranty is voided.

MOTORLINE ELECTROCELOS SA.
Travessa do Sobreiro, nº29
4755-474 Rio Côvo (Santa Eugénia)
Barcelos, Portugal

SYMBOLS LEGEND:

- Important safety notices

- Potentiometer information

- Useful information

- Connectors information

- Programming information

- Buttons information

02. PACKAGE

INSIDE THE PACKAGE

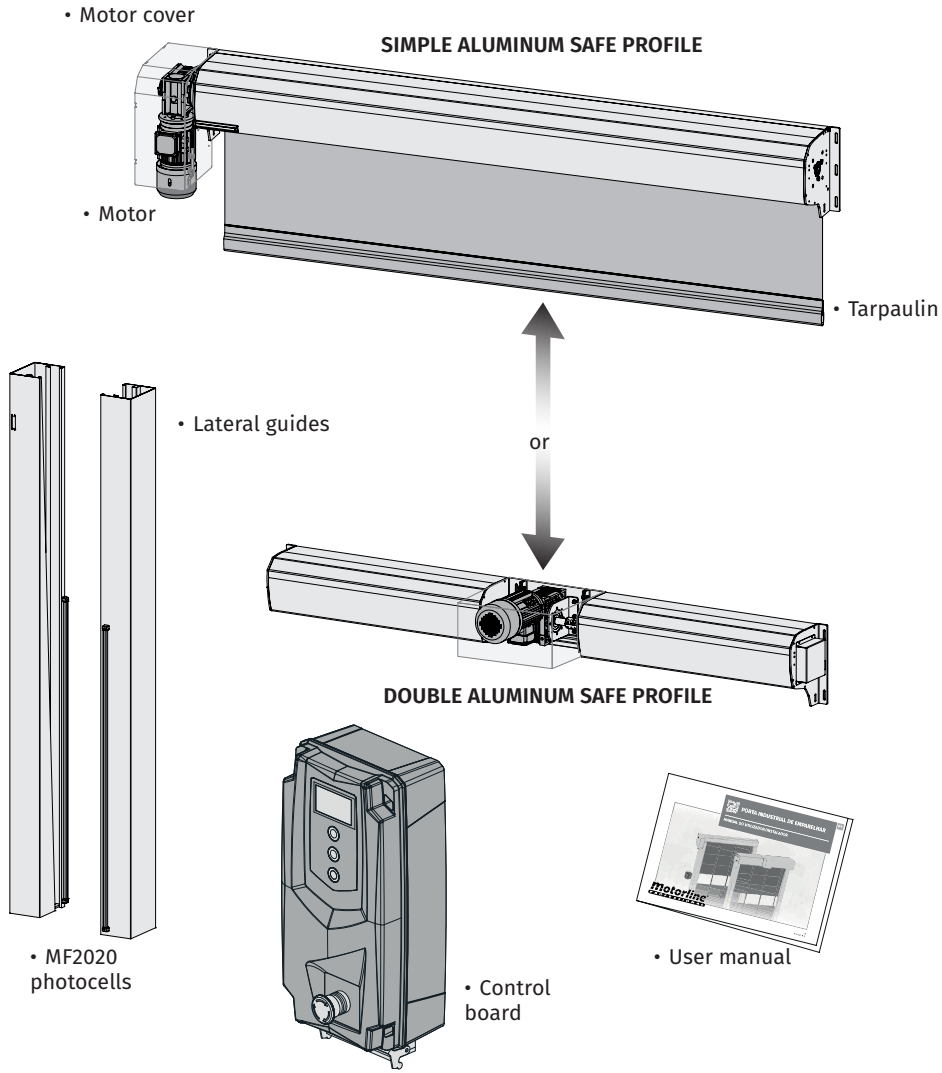

Some of the elements shown may require assembly.

03. AUTOMATION

TECHNICAL CHARACTERISTICS

The **stacking rapid door** designed with 50cm by 50cm reinforcement strut, suitable for high air pressure zones. With Motor from **1500W** to **4000W** (varies depending on the height of the door) controlled by an inverter with power supply at 230Vac or 380Vac. They can also be built with a **Single** or **Double Safe profile**.

MOTOR	1500W	2200W		3000W	4000W
• Central eletrónica	MC415	MC415	MC115	MC115	
• Power supply	230V 50/60Hz	230V 50/60Hz	380V 50/60Hz	380V 50/60Hz	
• Power	Δ 1500W (3x230)	Δ 2200W (3x230)	Y 2200W (3x380)	Y 3000W (3x380)	Y 4000W (3x380)
• Rotational speed	100 (±)	75 (±)		75 (±)	50 (±)
• Force	100 Nm	215 Nm		350 Nm	540 Nm
• Opening speed	826~1178 mm/s	518~683 mm/s		518~683 mm/s	301~354 mm/s
• Noise	≤ 60dB				
• Operating temperature	-25°C to 55°C				
• Protection Level	IP23				
• Working Frequency	Intensive				
• Insulation Class	Class F				

TARPAULIN	
• Yarn	2 x 1100 dtex PES HT
• Weight	900 g/m²
• Tensile strength	400/400 daN/5 cm
• Tear resistance	45/45 daN
• Operating temperature	-30°C to 70°C
• Grip	10/10 daN/5 cm
• Abrasion resistance	EN ISO 5470-2 10000 cycles

TRANSPARENT STRIP	Up to -10°C	Above -10°C
• Thickness	2mm	2mm
• Material	PVC	PVC
• Hardness	-	-
• Weight	-	-
• Tensile strength	-	18.59~20.90Mpa
• Tear resistance	-	10.80~12.70Mpa
• Elasticity	-	439 a 482%
• Cold cracking	-	-
• Light Passage	Yes	Yes

DIMENSIONS (UP TO 6500 MM) - NORMAL KIT

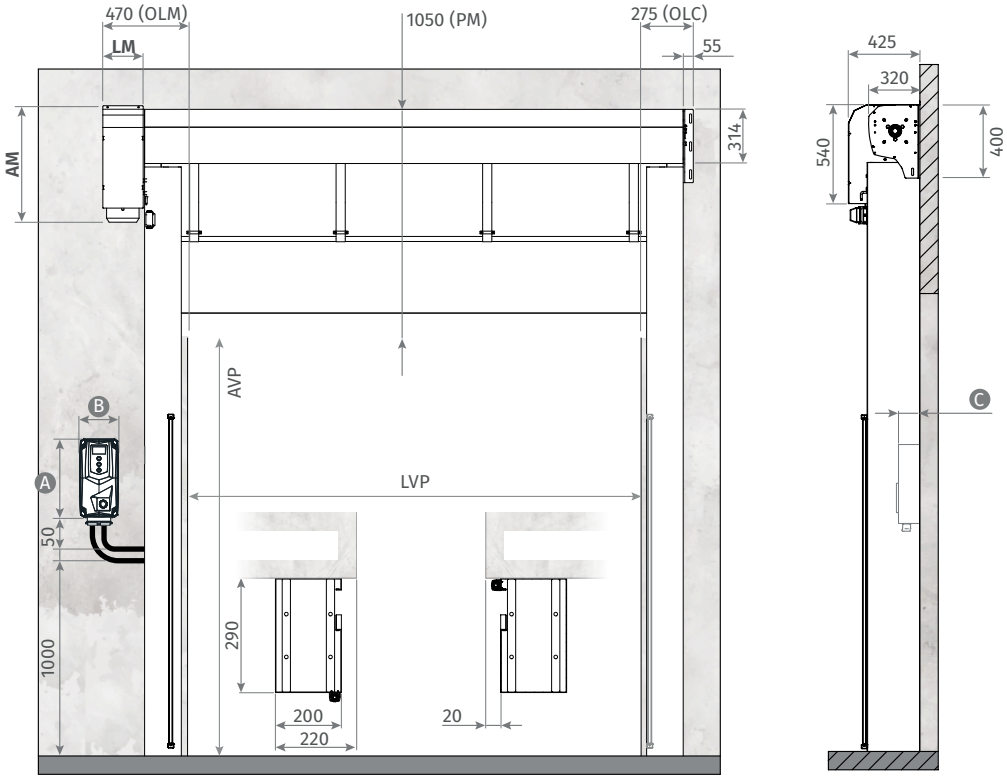

	LETTER PILE 1	PILE 2	PILE 3	PILE 4
LM	248	248	248	248
AM	620	665	665	665

DIMENSIONS (UP TO 6500 MM) - TUNNEL KIT

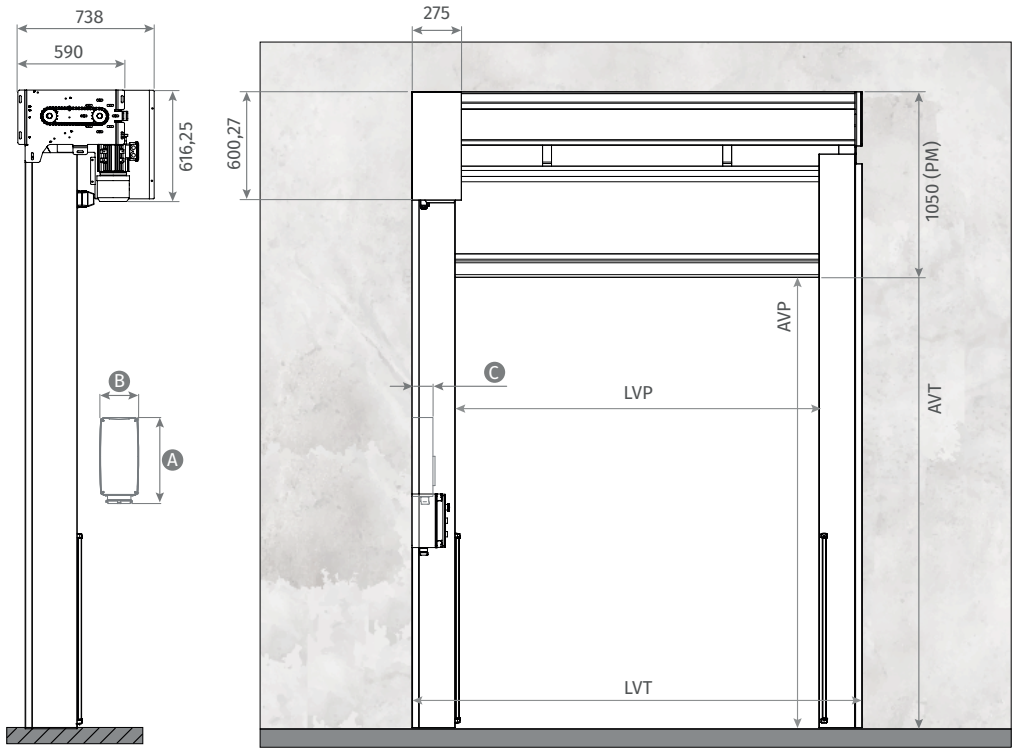

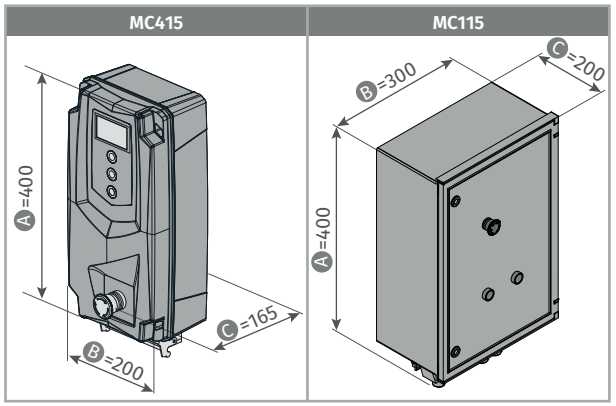

LEGEND

OLM • Motors side clearance
OLC • Opposite side clearance
PM • Minimum lintel
LVP • Width of passageway
LVT • Overall width of passageway
AVP • Height of passageway
AVT • Overall height of passageway
AM • Motor Height
LM • Motor Width

Dimensions given in mm.

DIMENSIONS (GREATER THAN 6500 MM) - NORMAL KIT

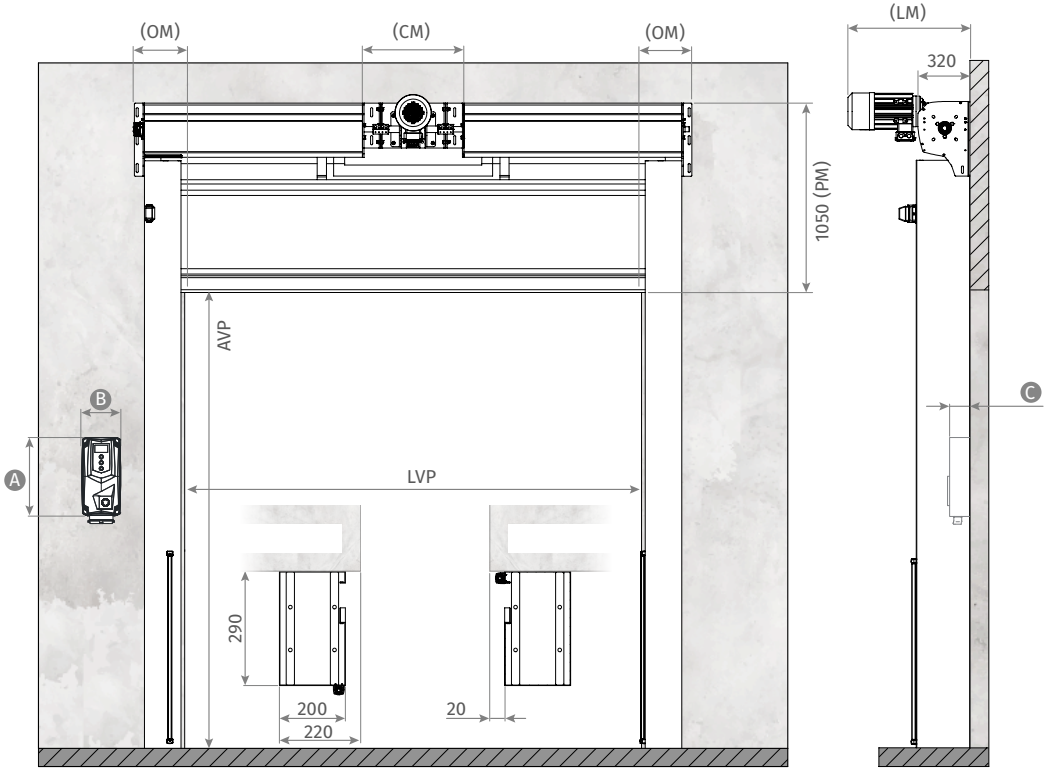

	PILE 2 (MC415)	PILE 3 (MC415)	PILE 4 (MC115)	PILE 5 (MC115)
CM	555	555	555	650
LM	665	655	655	745
OM	275	275	275	290

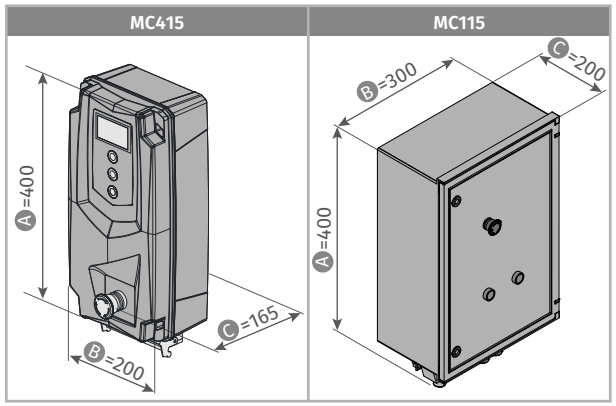

DIMENSIONS (GREATER THAN 6500 MM) - TUNNEL KIT

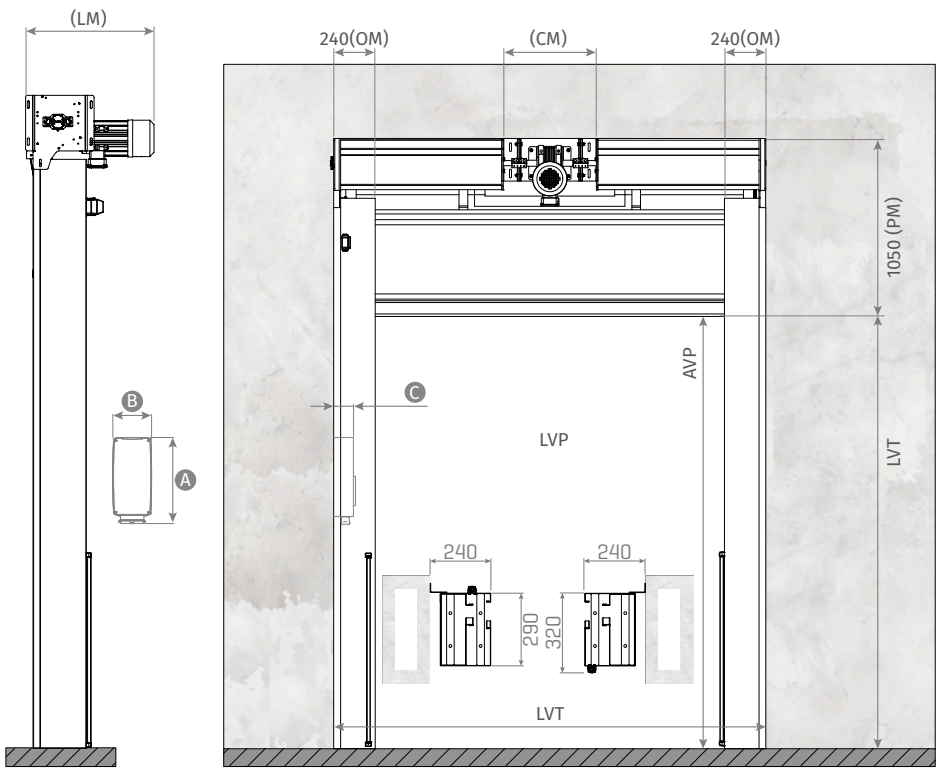

LEGEND

PM • Minimum lintel
LVP • Width of passageway
LVT • Overall width of passageway
AVP • Height of passageway
AVT • Overall height of passageway
OM • Minimum side clearance
AM • Motor Height
LM • Motor Width

Dimensions given in mm.

	PILE 2 (MC415)	PILE 3 (MC415)	PILE 4 (MC115)	PILE 5 (MC115)
CM	555	555	555	650
LM	695	695	695	795

04. INSTALLATION

INSTALLATION MAP - SIMPLE SAFE PROFILE

1 • Aluminum safe profile
2 • Lateral guides
3 • Motor protection
4 • Tarpaulin
5 • Control board
6 • Safe profile support plate
7 • Motor
8 • Connections connector
9 • Manual opening crank handle
10 • Up button
11 • STOP button
12 • Down button
13 • Emergency stop
14 • Photocell
15 • Transparent strip
16 • Reinforcement strut

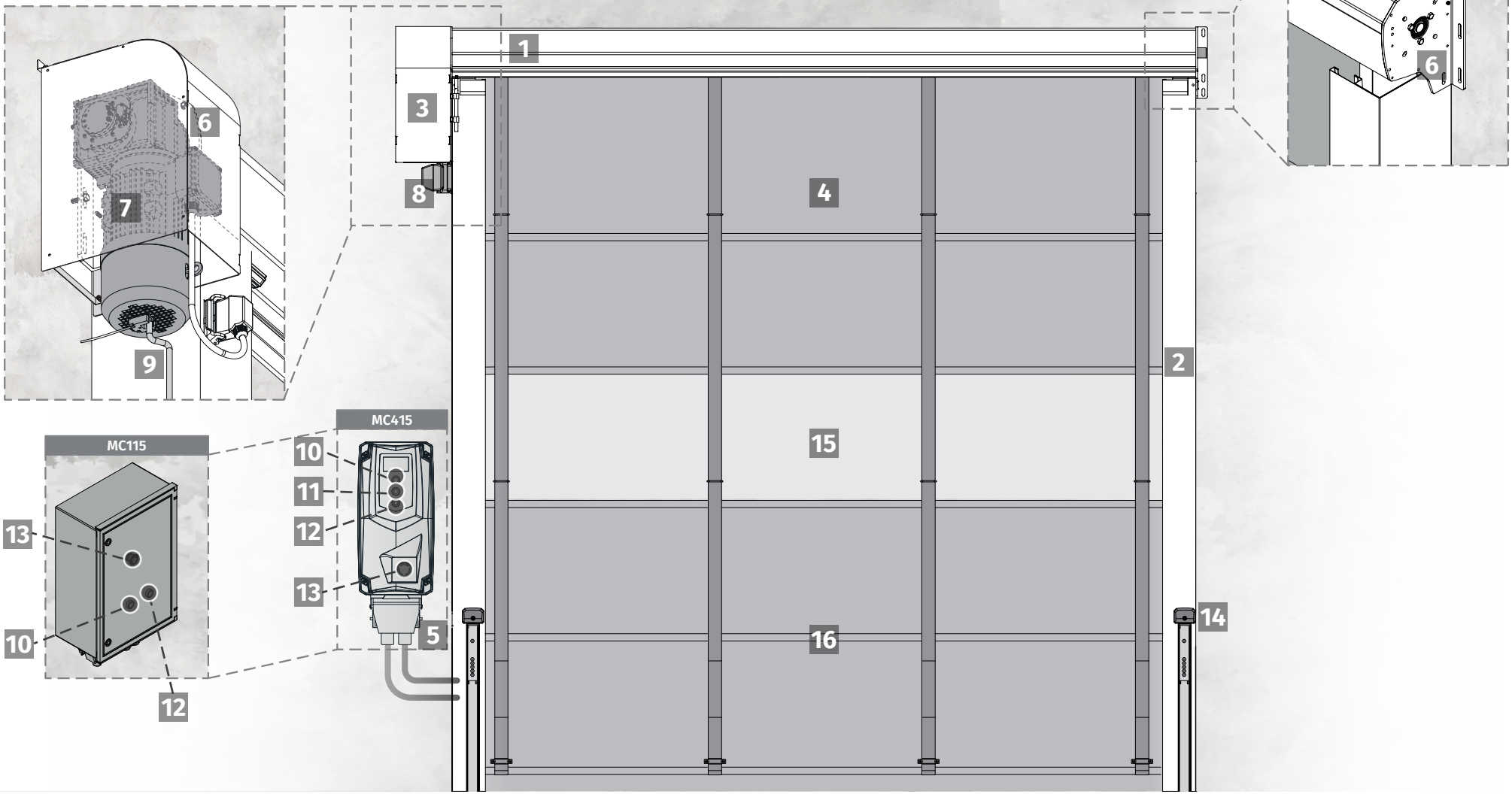

INSTALLATION MAP - DOUBLE SAFE PROFILE

1 • Aluminum safe profile
2 • Lateral guides
3 • Motor protection (optional)
4 • Tarpaulin
5 • Control board
6 • Safe profile support plate
7 • Motor
8 • Connections connector
9 • Manual opening crank handle
10 • Emergency stop
11 • Up button
12 • Down button
13 • Photocell
14 • Transparent strip
15 • Reinforcement strut

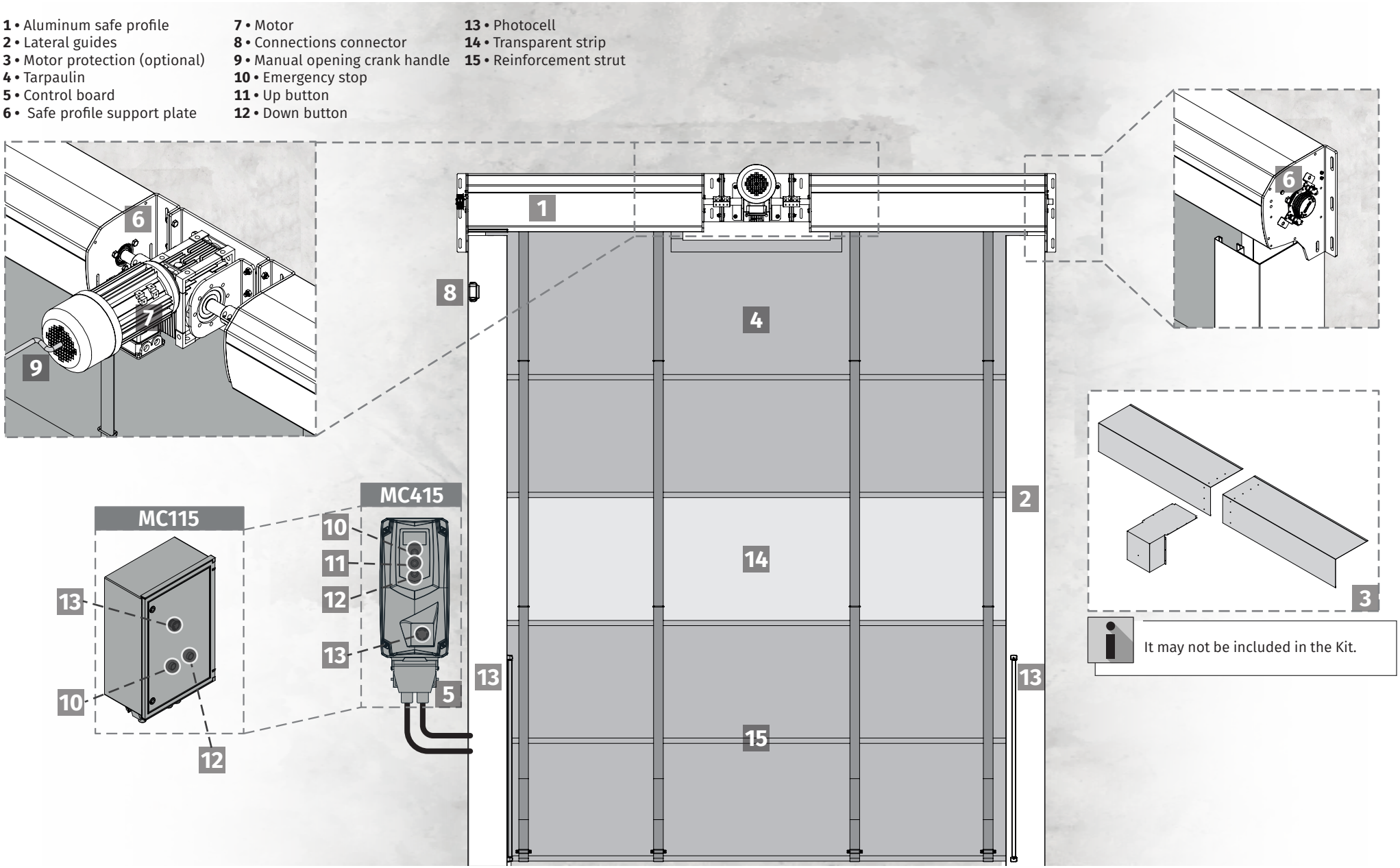

It may not be included in the Kit.

FIXING THE SIMPLE SAFE PROFILE

Check the height of the lateral guides in order to respect the measures required for installation.

Use the corresponding measurements on pg. 5A on pg. 6B.

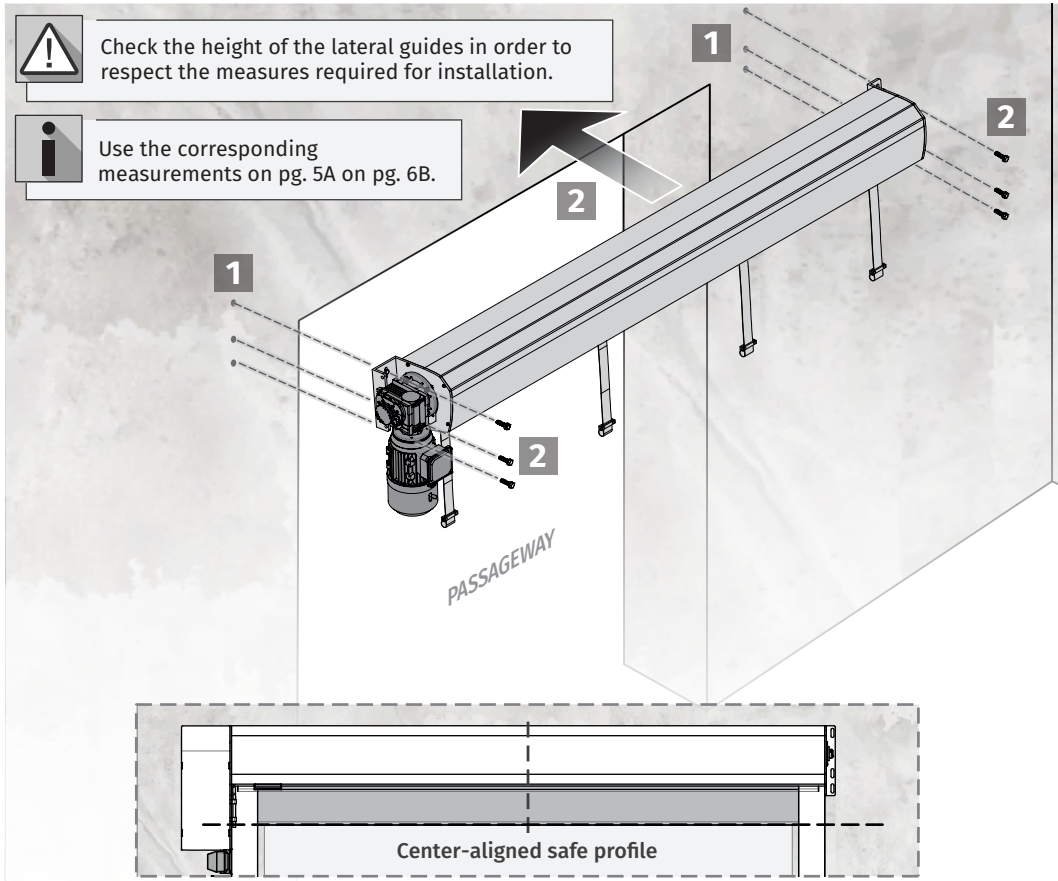

1 POSITION SAFE PROFILE

Install the safe profile on the wall, taking into account the horizontal leveling and the **85mm** between the base of the support plate and the beginning of the passageway.
Make sure the safe profile is centered with the passageway and mark the holes for drilling.

POSITION SAFE PROFILE (TUNNEL KIT)

Position the safe profile inside the tunnel at the installation site, taking into account the horizontal leveling.
Mark the drilling locations.

FIXING THE SIMPLE SAFE PROFILE (TUNNEL KIT)

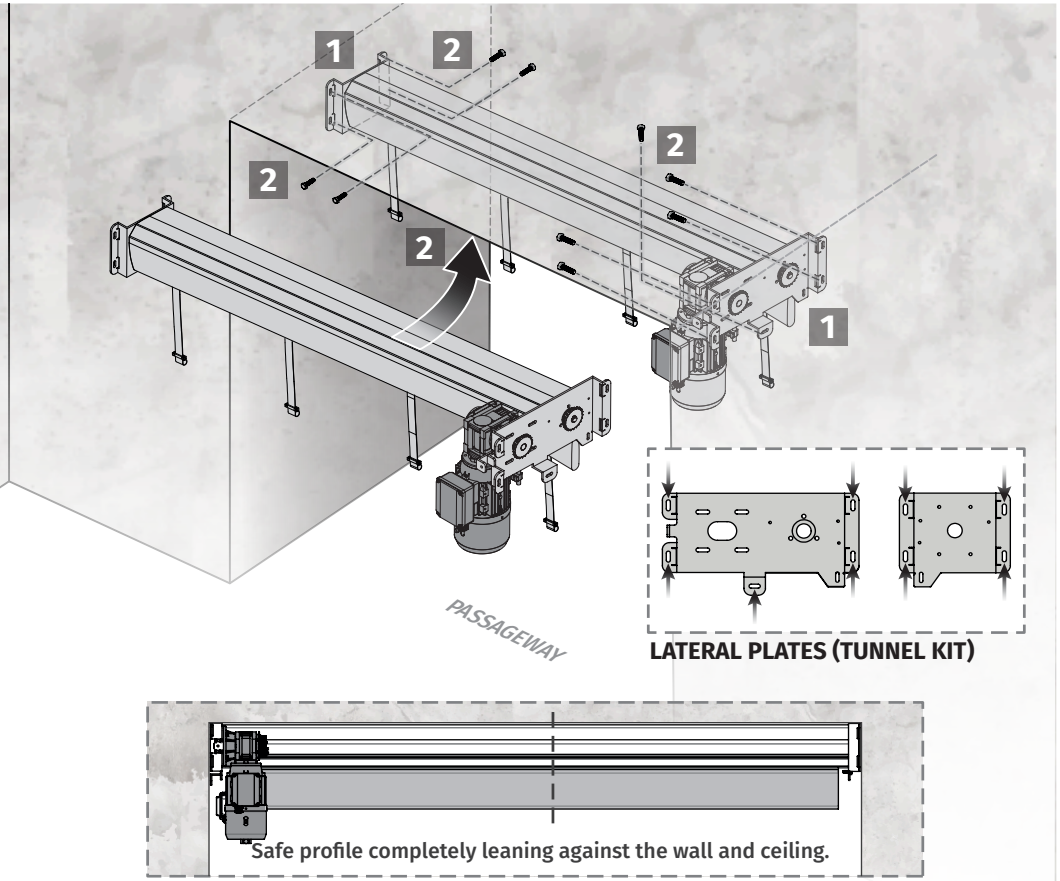

2 FIX SAFE PROFILE

Make the holes and then fix the safe profile on the wall with dowels and screws suitable for the installation location.
The safe profile must be securely fixed, so that accidents do not occur.

3 CHANGE THE PLUG

After the installation is complete, you must:
A - Remove the motor plug facing upwards (1)
B - Apply the breather plug (2), supplied with the motoreducer

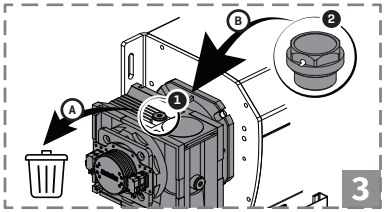

FIXING THE DOUBLE SAFE PROFILE

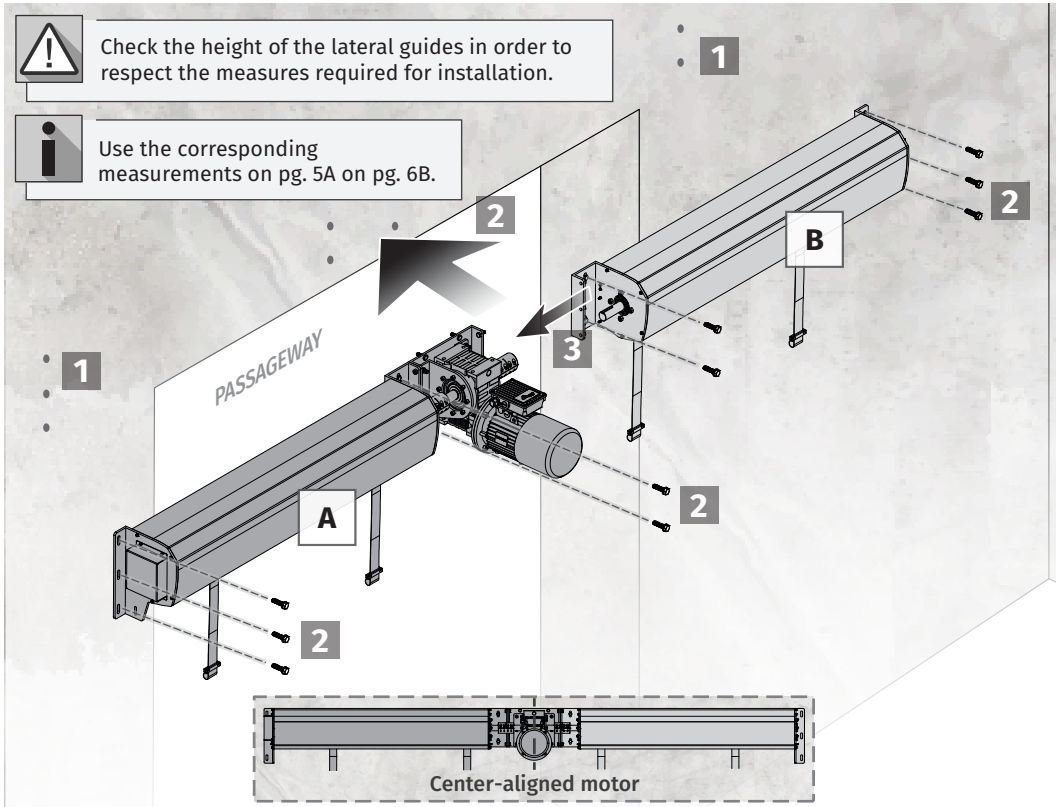

1 POSITION SAFE PROFILE
Install the safe profile on the wall, paying attention to the horizontal leveling and respecting the measurements of the lateral guides. Make sure the safe profile is centered with the passageway and mark the holes for drilling.

POSITION SAFE PROFILE (TUNNEL KIT)
Position the safe profile inside the tunnel at the installation site, taking into account the horizontal leveling.
Mark the drilling locations.

2 FIX SAFE PROFILES
Drill holes and then fix the safe profiles to the wall, starting by fixing S**afe profile A (safe profile with motor)**, with dowels and screws suitable for the installation location.
The safe profiles must be well fixed, so that accidents do not occur.

FIXING THE DOUBLE SAFE PROFILE (TUNNEL KIT)

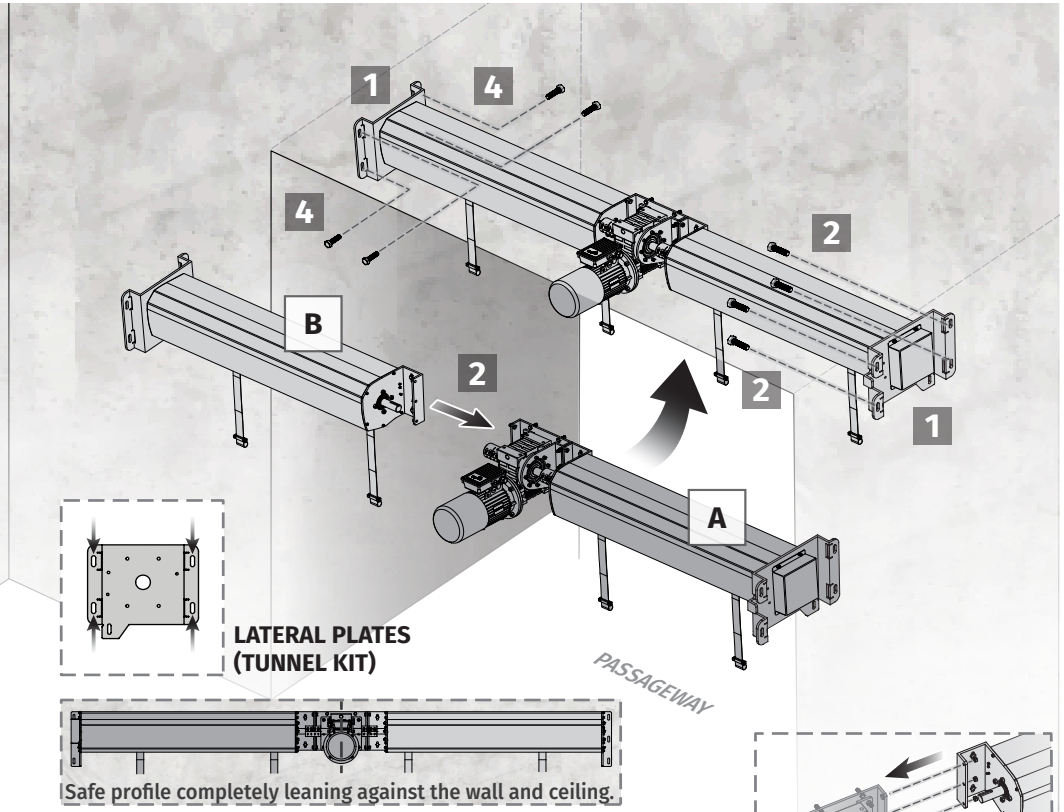

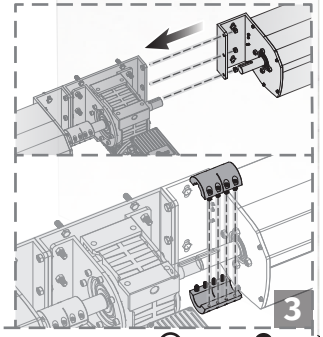

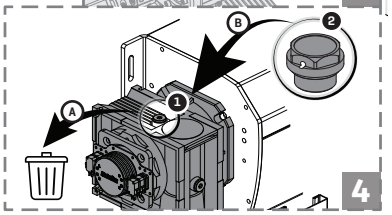

3 JOIN SAFE PROFILE
Mount **safe profile B** on **safe profile A** using the 3 screws on the lateral plates.
Join the motor shafts and the **safe profile B** through the transmission cardan with 8 screws.

4 CHANGE THE PLUG
After the installation is complete, you must:
A - Remove the motor plug facing upwards (1)
B - Apply the breather plug (2), supplied with the motoreducer

LATERAL GUIDES - SIMPLE SAFE PROFILE

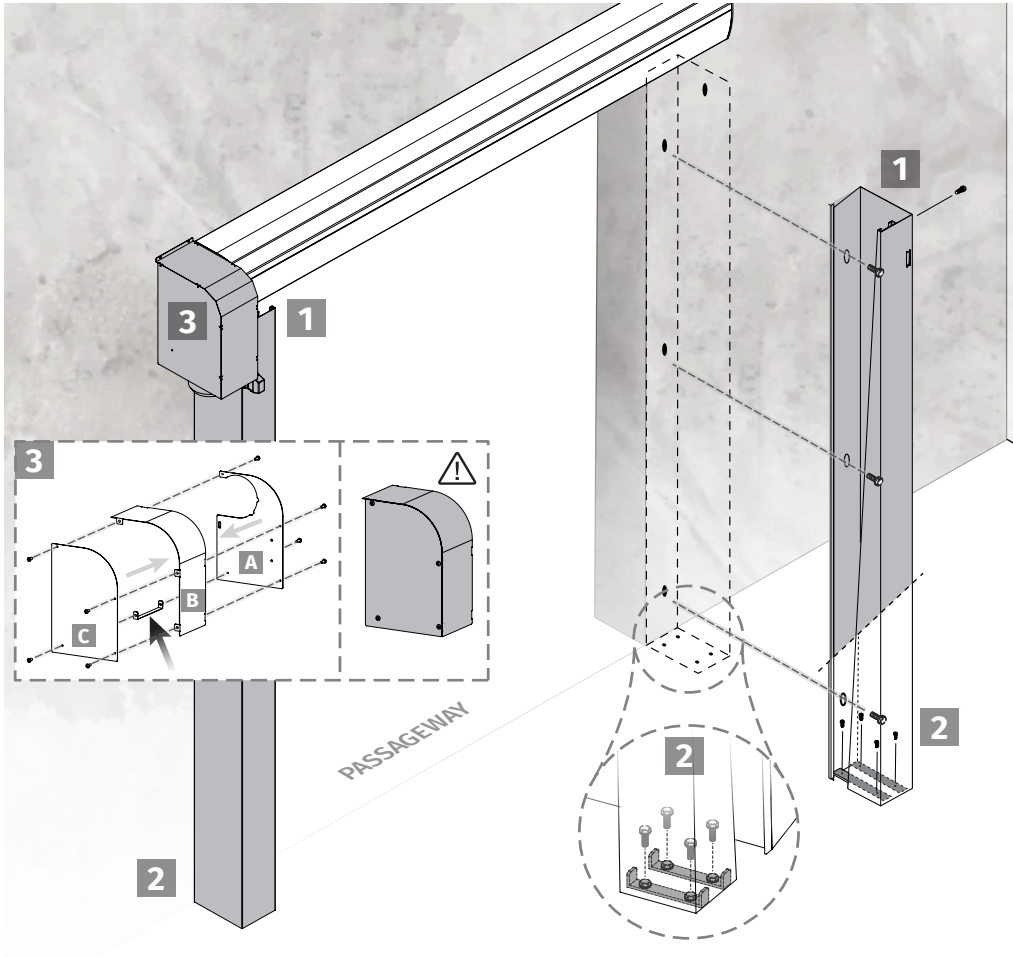

1 APPLY LATERAL GUIDES

Fit the lateral guides through the inside of the lateral plates and place them against the wall.
The tarpaulin should be positioned so that it run on the lateral guides.
Secure the lateral guides to the support plates with screws, tightening them in the nuts located on the lateral guides.

2 FIX LATERAL GUIDES TO THE GROUND

Drill the floor taking into account the marks on the plates.
Apply the screws and tighten them until the guides are properly secured.

LATERAL GUIDES - SIMPLE SAFE PROFILE (TUNNEL KIT)

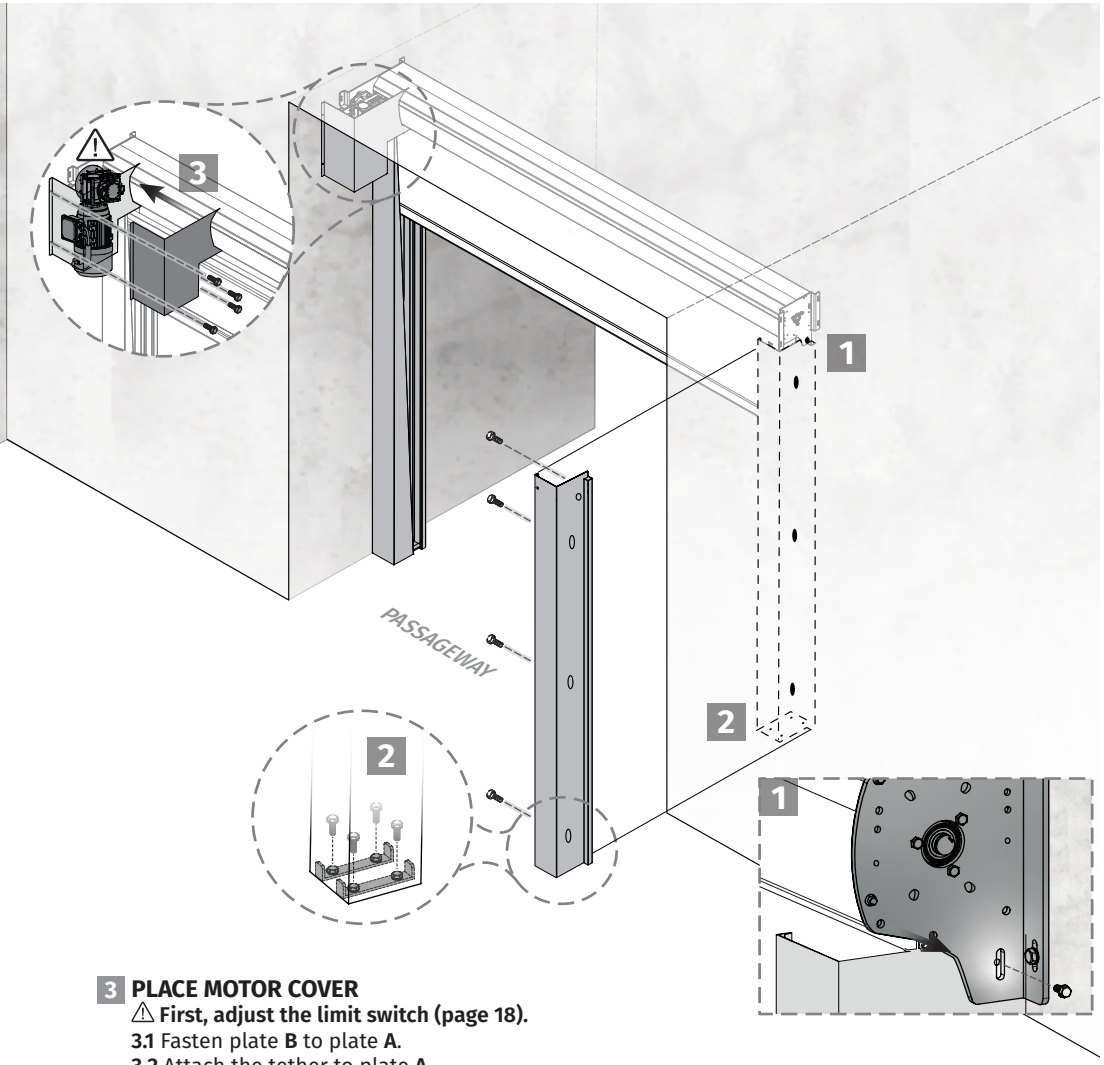

3 PLACE MOTOR COVER

⚠ **First, adjust the limit switch (page 18).**
3.1 Fasten plate **B** to plate **A**.
3.2 Attach the tether to plate **A**.
3.3 Attach plate **C** to plate **B** and to the tether.
3.4 Tighten the 2 screws at the top of the cover.

PLACE MOTOR COVER (TUNNEL KIT)

⚠ **First, adjust the limit switch (page 18).**
Make holes in the wall according to the plate and tighten the 4 screws to the wall.

LATERAL GUIDES - DOUBLE SAFE PROFILE

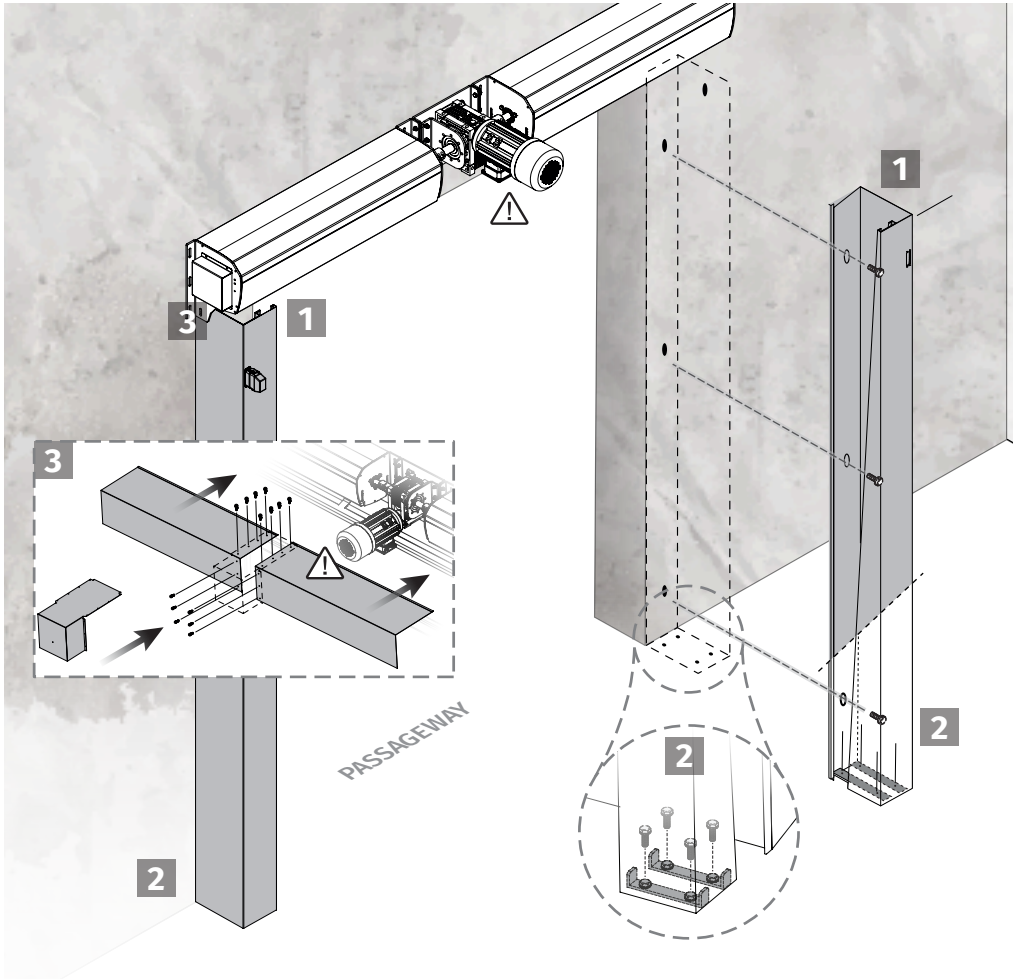

1 APPLY LATERAL GUIDES

Fit the lateral guides through the inside of the lateral plates and place them against the wall.
The tarpaulin should be positioned so that it run on the lateral guides.
Secure the lateral guides to the support plates with screws, tightening them in the nuts located on the lateral guides.

2 FIX LATERAL GUIDES TO THE GROUND

Drill the floor taking into account the marks on the plates.
Apply the screws and tighten them until the guides are properly secured.

LATERAL GUIDES - DOUBLE SAFE PROFILE (TUNNEL KIT)

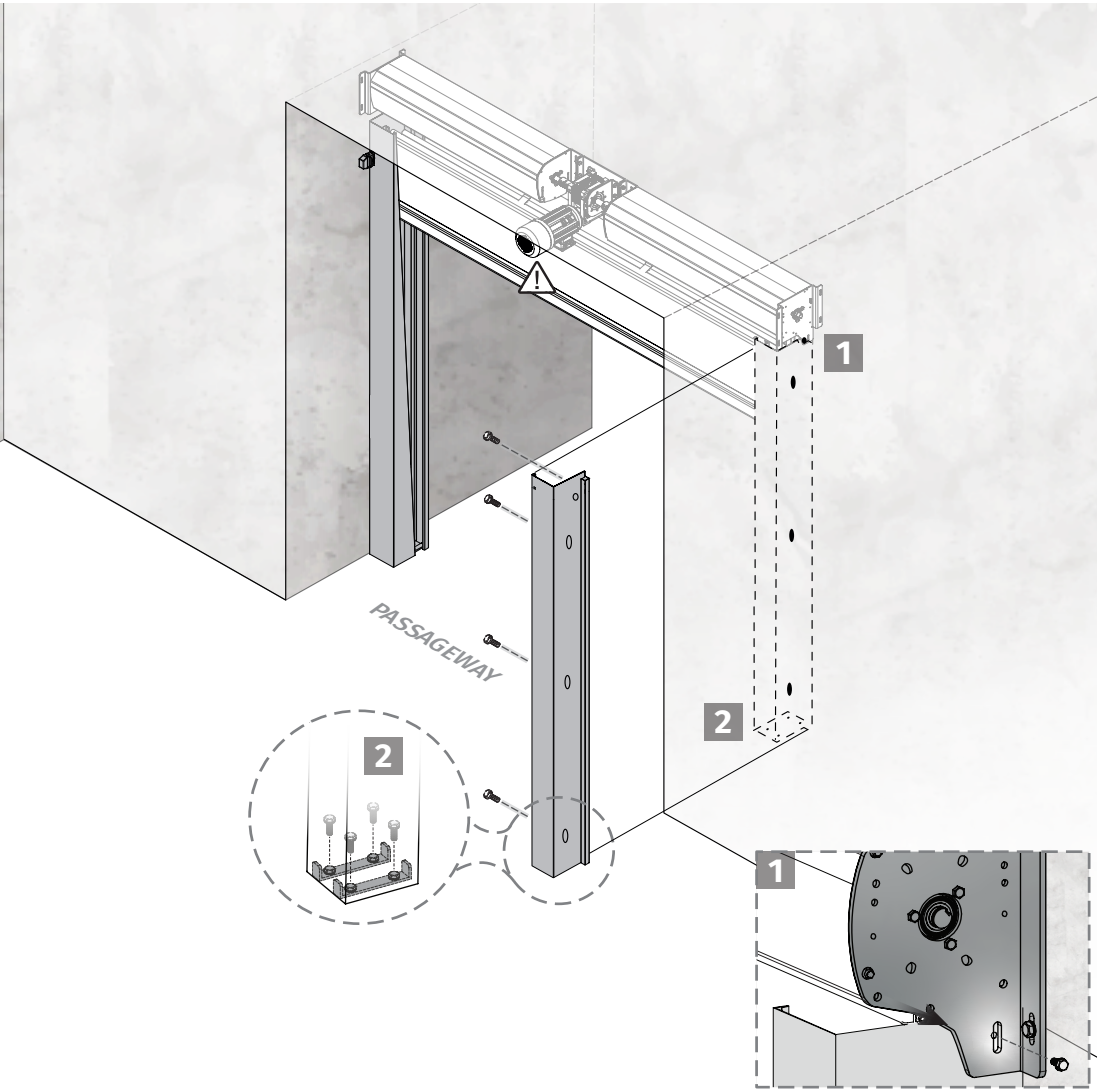

3 PLACE MOTOR COVER (OPTIONAL)

⚠ **First, adjust the limit switch (page 18).**

3.1 Assemble and secure the safe profile covers.

3.2 Assemble the motor cover, fixing it on the safe profile covers.

CONTROL BOARD AND PHOTOCELLS

The procedures described on this page are the same for all types of PILE. Adjust the procedures if necessary.

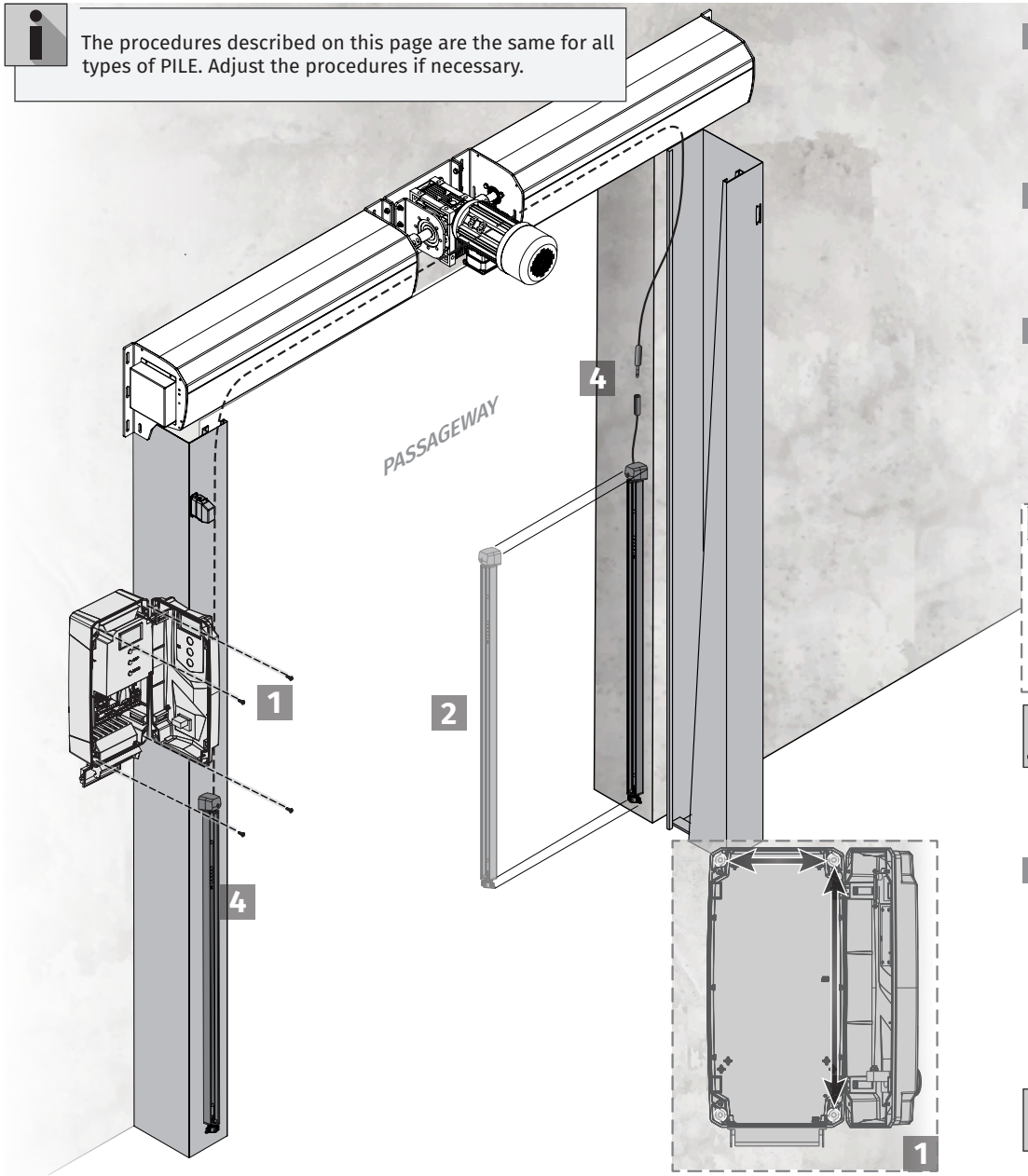

1 FIX CONTROL BOARD
Choose the fixing location and mark the holes according to the existing marks on the box.
Drill the wall and fix the box with suitable screws and dowels.

2 FIXING THE MF2020 PHOTOCELLS
Remove the covers, position the photocells and make the marks.
Drill the wall/guide and fix the photocells.

3 TUNE THE PHOTOCELLS MF2020
Loosen the screws on the fixing plates and rotate the photocells until the beams of both are aligned.
Tighten the fixing plates again to lock the positions of the MF2020.

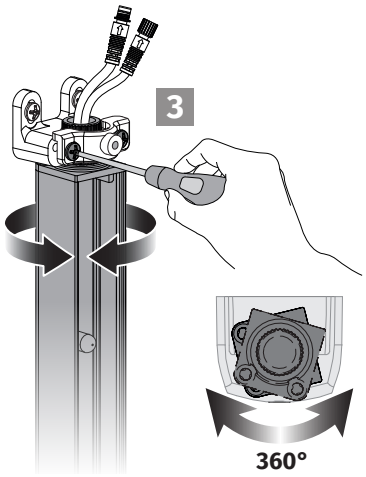

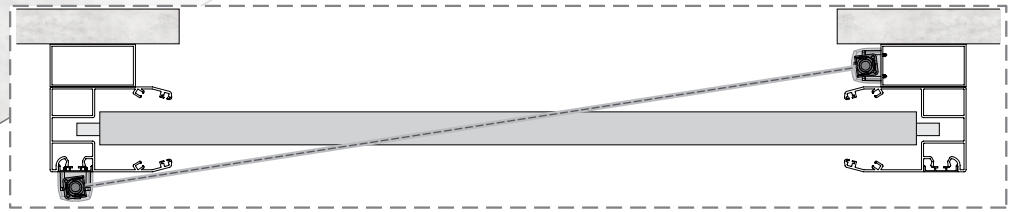

The photocell sensors must be perfectly aligned for the product to work without anomalies.

4 CONNECTION MF2020 PLUG
Connect the RX cable (control board side) to the TX cable on the opposite side.
When connecting, the arrows indicated on the cables must face each other.
Note: We recommend using a cable truncking along the route you choose for the cable.

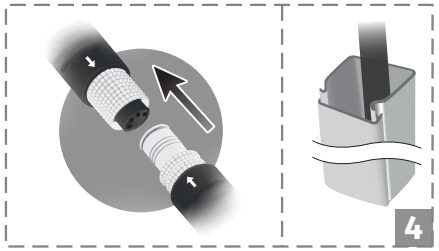

Consult the product manual for more detailed information on installation and adjustments of the **MF2020** photocells.

TARPAULIN ASSEMBLY

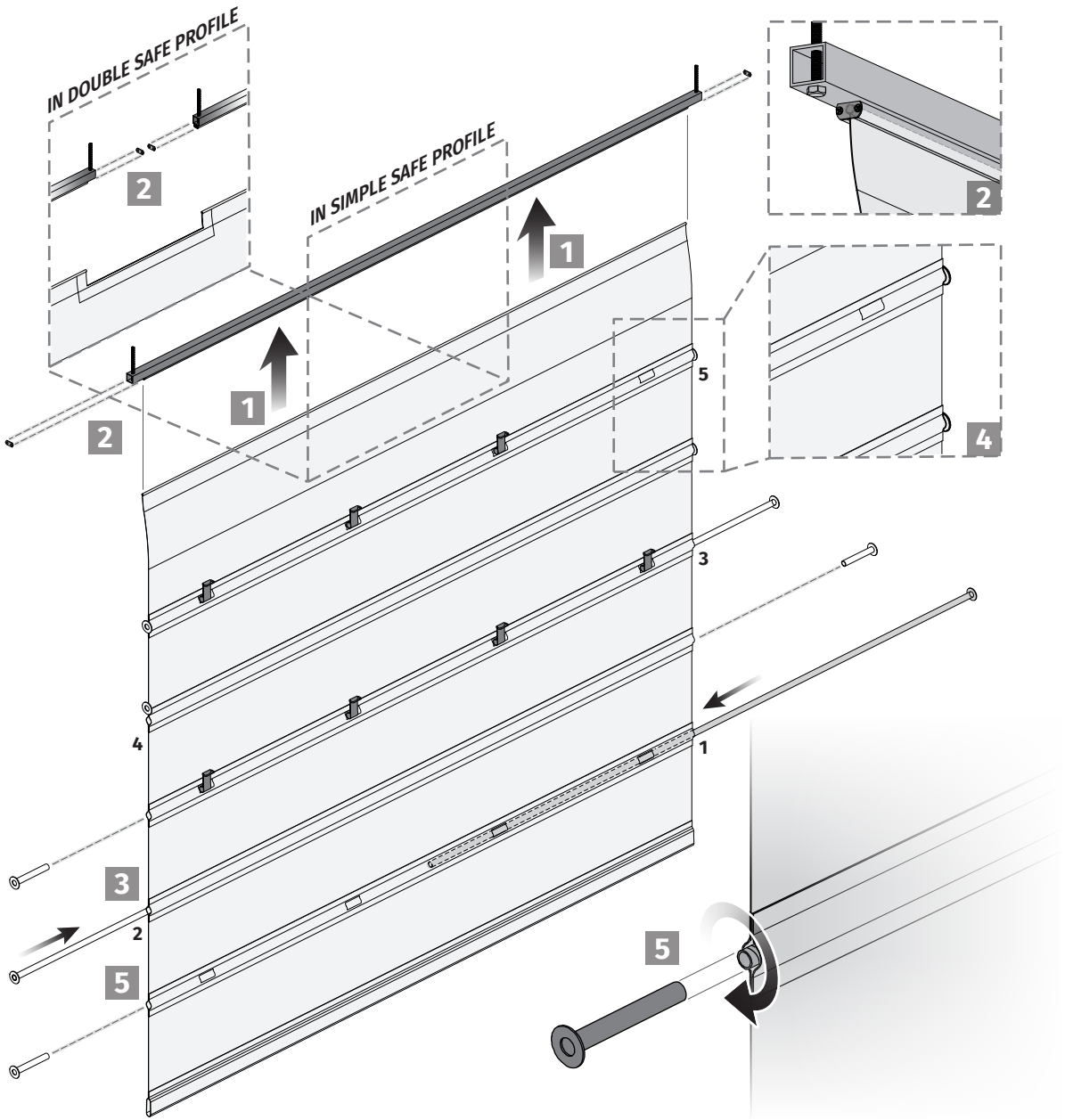

For doors less than 11m wide, skip these steps and proceed to the next page.

FIX SUPPORT PROFILE ON TARPAULIN

1 Mount the tarpaulin on the support rails.

2 Fit the tops of the guides to prevent the tarpaulin from moving.

ASSEMBLY OF STRUTS ON TARPAULIN

The tarpaulin is manufactured with bags for struts of 500mm by 500mm.
In half of the bags, there are slots for mounting the straps and buckles.

The assembly of the struts on the tarpaulin has to be carried out alternately on the right and left.
Example: Struts 1, 3, 5, 7, etc. are mounted on the right side and struts 2, 4, 6, 8, etc. are mounted on the left side.

3 Mount the struts in the **bags without slots**, inserting them from the **left side**.

4 Mount the struts in the bags with slots, inserting them from the right side.
Whenever a struts passes through a slot, a buckle must be fitted, except for the last (lower) bag.
• ***The last bag doesn't need buckles because the straps fasten directly to the strut.***

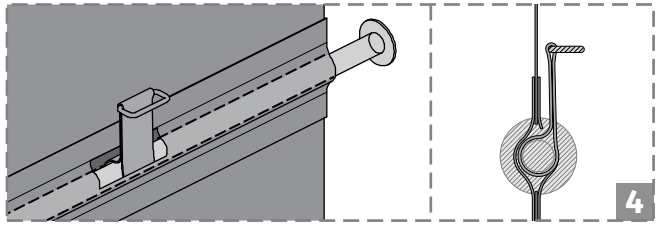

5 **FIX STRUTS**
Fix the struts with 500mm tubes, screwing them onto the struts already mounted on the tarpaulin.

TARPAULIN ASSEMBLY IN THE SIMPLE SAFE PROFILE

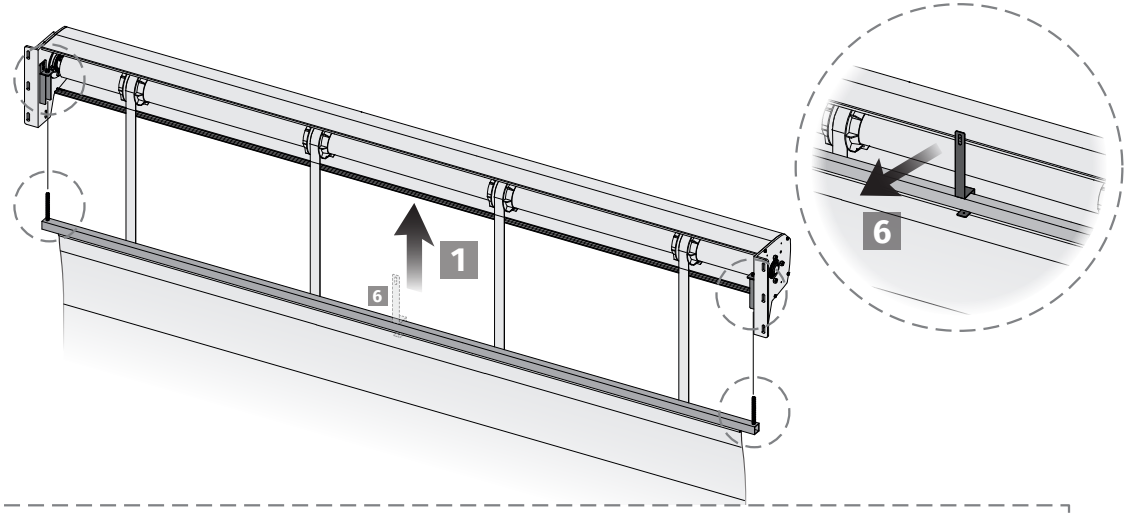

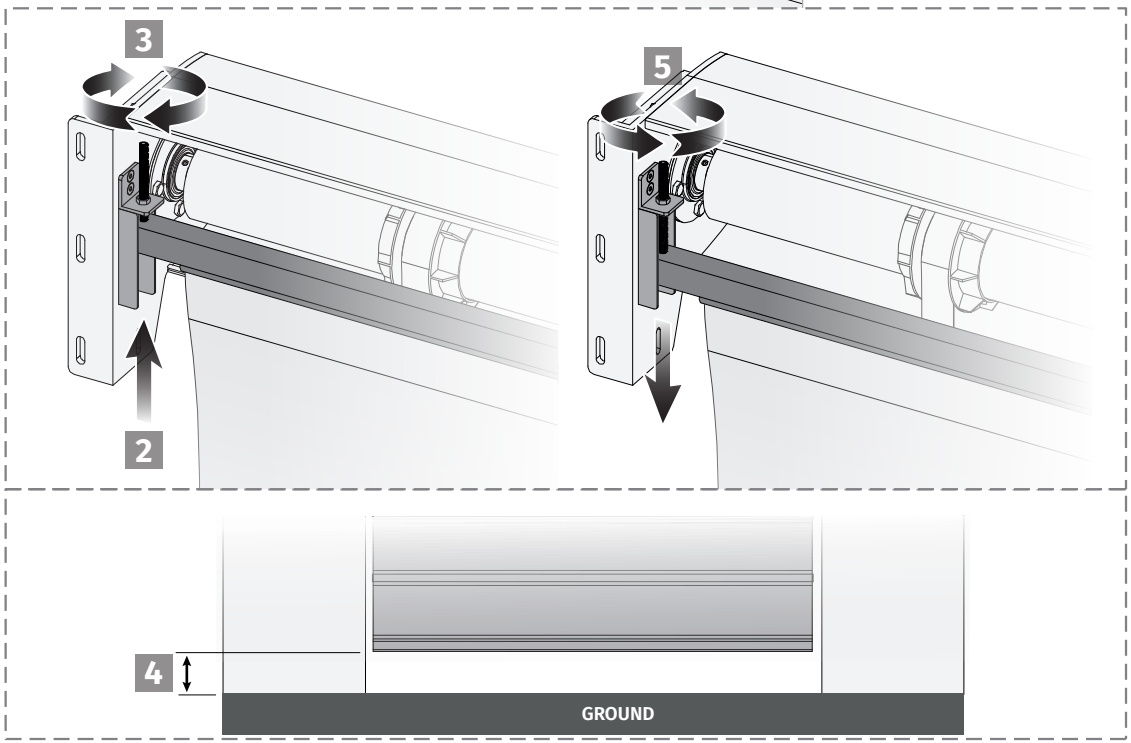

TARPAULIN ASSEMBLY IN THE DOUBLE SAFE PROFILE

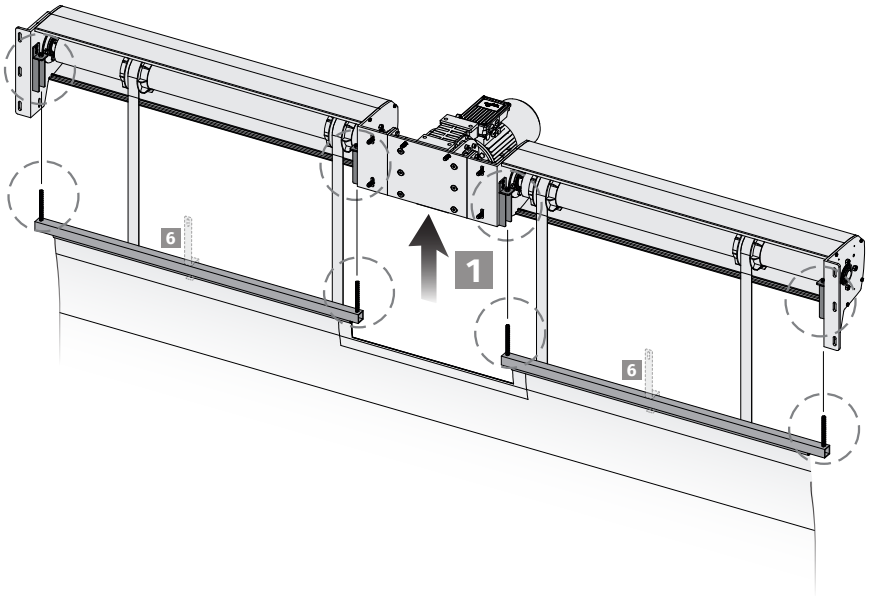

ASSEMBLE TARPAULIN SUPPORT PROFILE ON THE TUNERS

1. With the help of cargo lift, raise the tarpaulin to the safe profile, in order to fix it.
2. Mount the tarpaulin support profiles on the tuners inside the safe profile. The double safe profile has 4 tuners and the single has 2.
3. Tighten the adjustment screws as far as possible to bring the tarpaulin to the top position.
4. Lower the cargo lifts to fully extend the tarpaulin, and check the clearance to the ground.
5. Use the tuners to lower the tarpaulin until it touches the ground.
6. Apply the support in the middle of the tarpaulin support profile to prevent the profile from bending.

TARPAULIN ASSEMBLY IN THE SAFE PROFILE

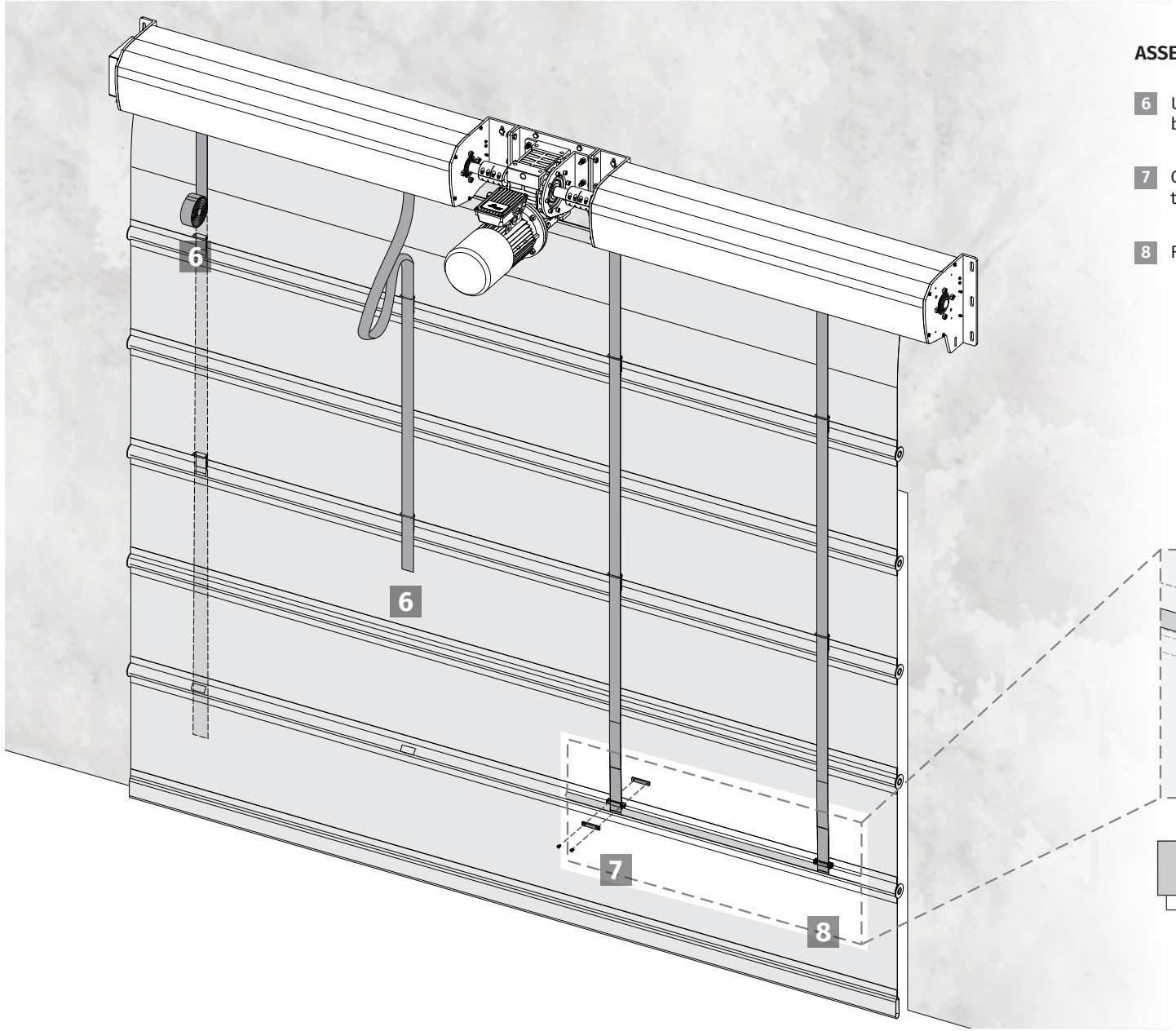

ASSEMBLY OF STRAPS ON STRUTS

6 Unroll the straps and run them through the inside of all the struts buckles.

7 On the last strut (lower), you should pass the straps around it, through the inside of the bag.

8 Fix the straps with the clamping plates to lock them in this position.

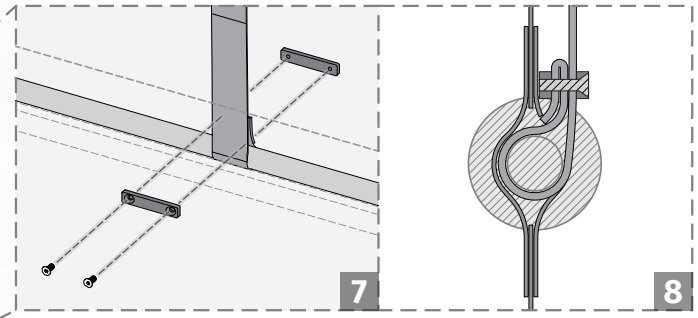

The process is the same for single and double safe profiles.

MANUAL OPENING/CLOSING

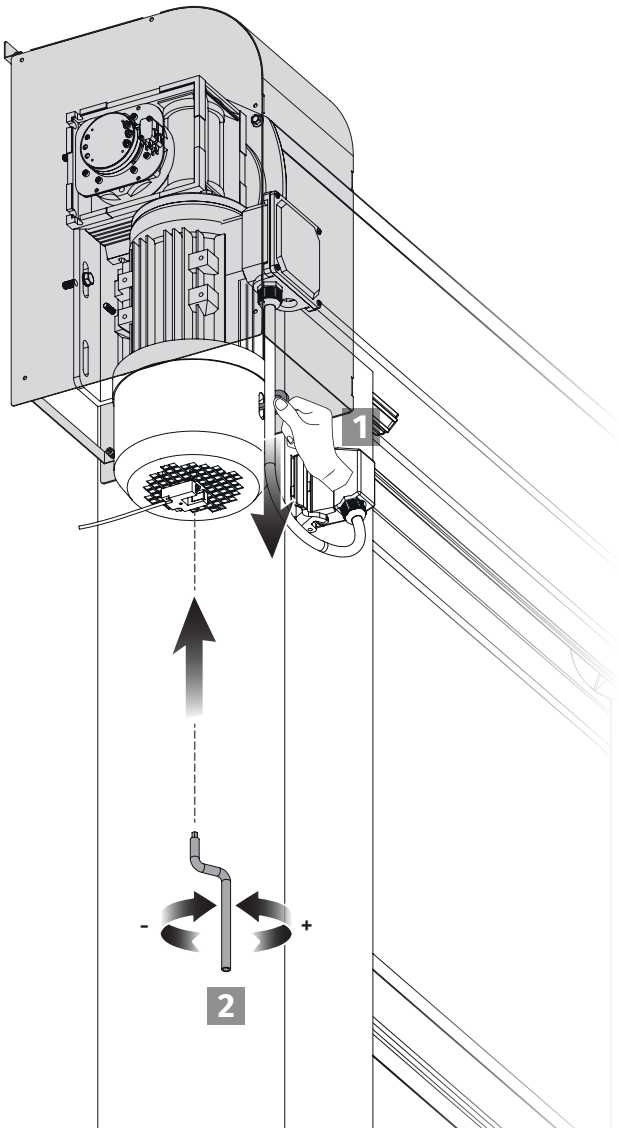

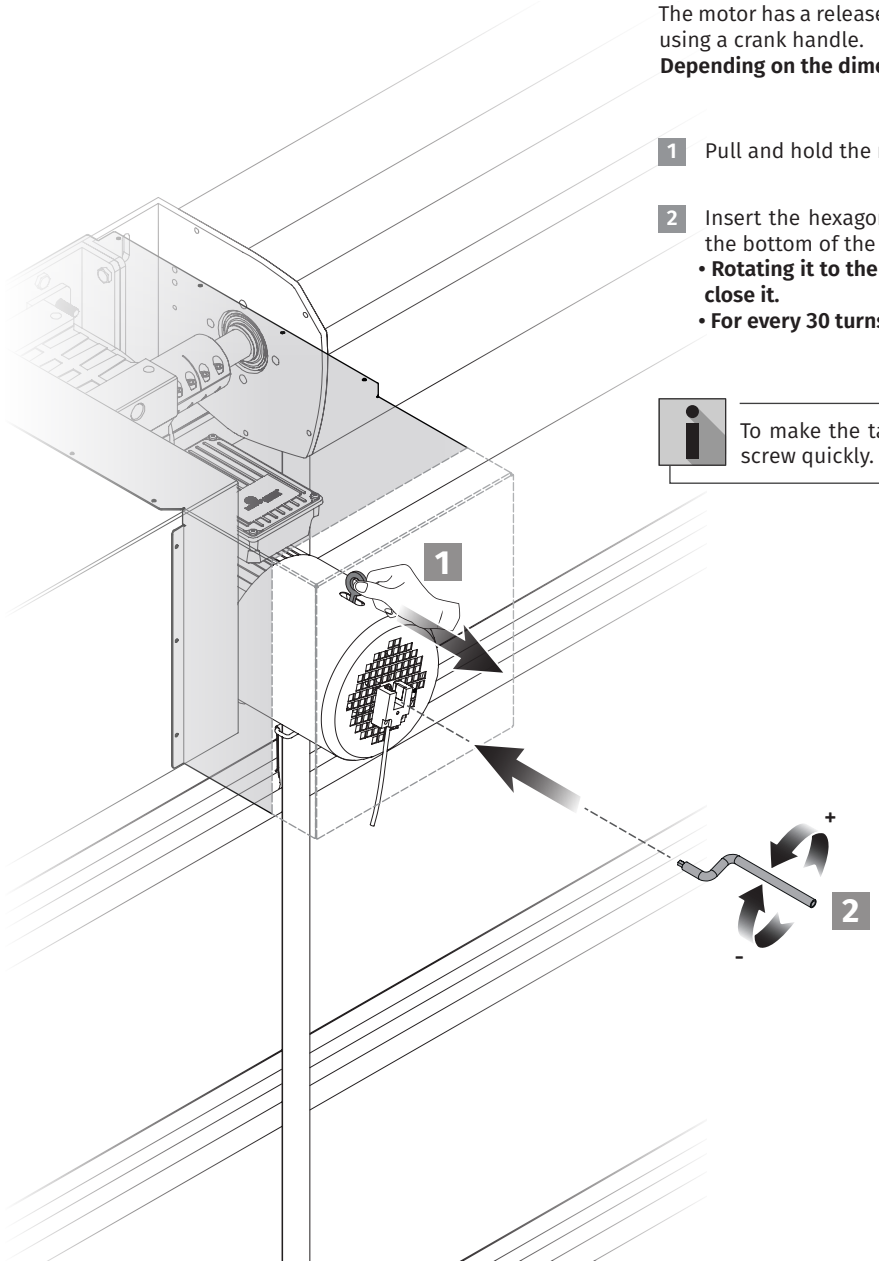

The motor has a release lever that allows you to manually open/close the door using a crank handle.
Depending on the dimension of the door, the position of the motor varies.

1 Pull and hold the release lever in this position.

2 Insert the hexagonal crank handle into the unlocking screw (located at the bottom of the motor) and turn it to open or close the door:
- **Rotating it to the right will open the door and rotating it to the left will close it.**
- **For every 30 turns, the door will go up/down about 400mm.**

To make the task easier, use an automatic screwdriver to turn the screw quickly.

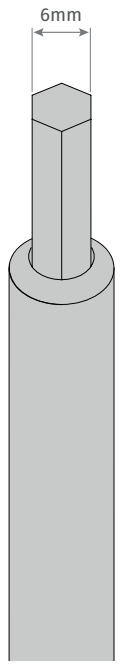

LIMIT-SWITCHES ADJUSTMENT

• ADJUSTMENT

Ring **4** must activate the micro-switch from below, and ring **3** must activate the micro-switch from above

• CONNECTIONS

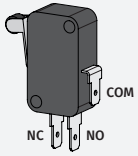

SIMPLE SAFE PROFILE
Tuner next to the motor

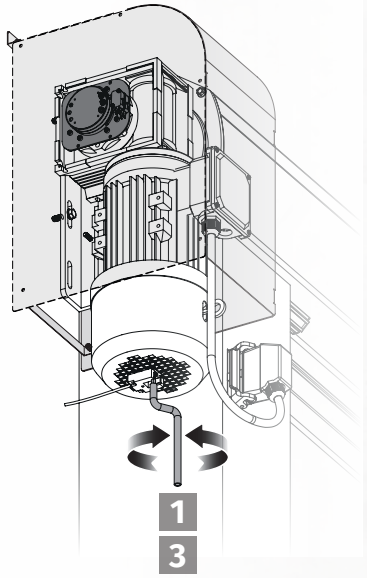

DOUBLE SAFE PROFILE
Tuner on the top of the safe profile

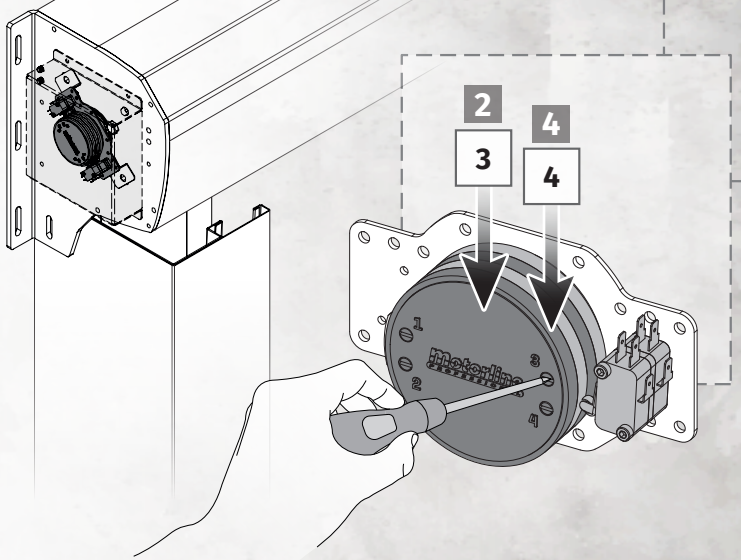

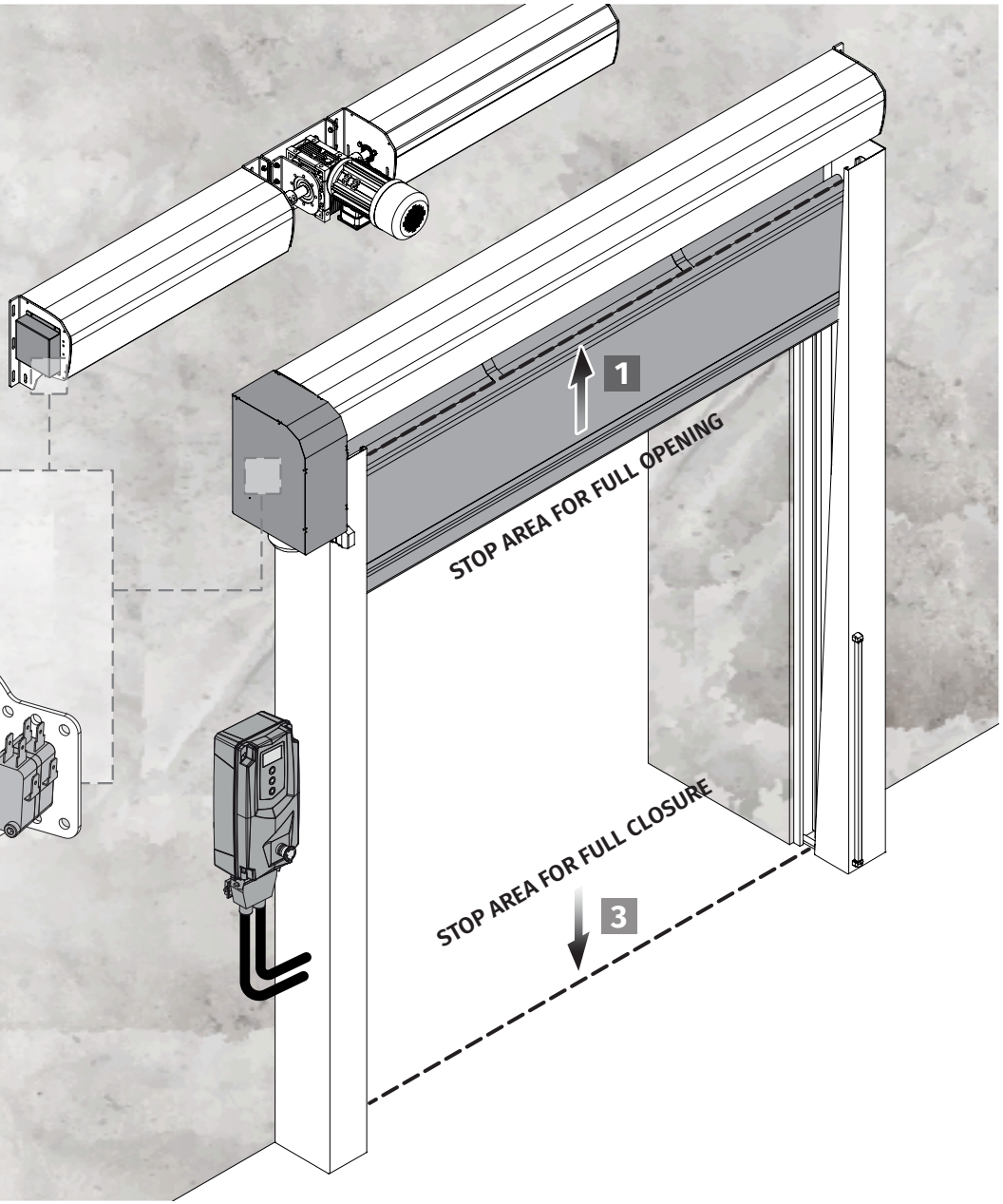

1 As exemplified on the previous page, manually open the door to the stop area for full opening.

2 Turn the adjustment screw 4 until ring 4 on the limit switch activates the corresponding micro-switch.

3 As exemplified on the previous page, manually close the door to the stop area for full closure.

4 Turn the adjustment screw 3 until ring 3 on the limit switch activates the corresponding microswitch.

05. MAINTENANCE

MAINTENANCE TASKS AND FREQUENCY

During maintenance/revision check the parameters mentioned below.
On the date you carry out the maintenance, mark with an "X" the tasks performed.

	Frequency (months)				Date	Date	Date	Date	Date	Date	Date
	6	12	24	36	/ /	/ /	/ /	/ /	/ /	/ /	/ /
1. MECHANICAL OPERATION											
Fastening the door to the frame		X									
Noise from scrolling points		X									
Electric brake - manual release		X									
Door speed		X									
Insect cleaning		X									
Friction points on the tarpaulin to prevent tearing		X									
Wear and tear of the anti-storm kit (if applicable)		X									
2. ELECTRICAL FUNCTIONING											
Power supply protected by circuit breaker and ground wire		X									
Cable connection		X									
Operation of photocells at idle and maximum speed		X									
Bottom security (bottom profile)		X									
Soft stop and start		X									
Advertising		X									
Label for recording the intervention		X									
CE marking label		X									
Company / Technician:											

As maintenance standards vary depending on the legislation in the country where the door is being installed, the installer must check whether the recommended maintenance frequency is correct.