EN

FIX | FIX TERMO

RAPID SELF-REPAIRING DOOR

USER'S AND INSTALLER'S MANUAL

Motorline® PROFESSIONAL

v4.5
REV. 11/2025

00. CONTENT

INDEX

01. SAFETY INSTRUCTIONS
STANDARDS TO FOLLOW 1B

02. PACKAGE
INSIDE PACKAGE 4A

03. AUTOMATISM
TECHNICAL SPECIFICATIONS 4B
MANUAL OPENING/CLOSING 4B
DIMENSIONS - NORMAL KIT 5A
DIMENSIONS - TUNNEL KIT 5B

04. INSTALLATION
INSTALLATION MAP 6
SAFE PROFILE FIXATION 7
LATERAL GUIDES AND CONTROL BOARD FIXATION 8

05. INSTALLATION TUNNEL KIT
SAFE PROFILE FIXATION 9
LATERAL GUIDES AND CONTROL BOARD FIXATION 10

06. LIMIT-SWITCHES
LIMIT-SWITCHES ADJUSTMENT 11

07. TROUBLESHOOTING
INSTRUCTIONS FOR CONSUMERS / TECHNICIANS 12

08. MAINTENANCE
MAINTENANCE TASKS AND FREQUENCY 13

01. SAFETY INSTRUCTIONS

CE	This product is certified in accordance with European Community (EC) safety standards.
RoHS	This product complies with Directive 2011/65/EU of the European Parliament and of the Council, of 8 June 2011, on the restriction of the use of certain hazardous substances in electrical and electronic equipment and with Delegated Directive (EU) 2015/863 from Commission.
	(Applicable in countries with recycling systems). This marking on the product or literature indicates that the product and electronic accessories (eg. Charger, USB cable, electronic material, controls, etc.) should not be disposed of as other household waste at the end of its useful life. To avoid possible harm to the environment or human health resulting from the uncontrolled disposal of waste, separate these items from other types of waste and recycle them responsibly to promote the sustainable reuse of material resources. Home users should contact the dealer where they purchased this product or the National Environment Agency for details on where and how they can take these items for environmentally safe recycling. Business users should contact their vendor and check the terms and conditions of the purchase agreement. This product and its electronic accessories should not be mixed with other commercial waste.
	This marking indicates that batteries should not be discarded like other household waste at the end of their useful life. Batteries must be delivered to selective collection points for recycling.
	The different types of packaging (cardboard, plastic, etc.) must be subject to selective collection for recycling. Separate packaging and recycle it responsibly.
	This marking indicates that the product and electronic accessories (eg. charger, USB cable, electronic material, controls, etc.) are susceptible to electric shock by direct or indirect contact with electricity. Be cautious when handling the product and observe all safety procedures in this manual.

01. SAFETY INSTRUCTIONS

GENERAL WARNINGS

- This manual contains very important safety and usage information. Read all instructions carefully before beginning the installation/usage procedures and keep this manual in a safe place that it can be consulted whenever necessary.
- This product is intended for use only as described in this manual. Any other enforcement or operation that is not mentioned is expressly prohibited, as it may damage the product and put people at risk causing serious injuries.
- This manual is intended firstly for specialized technicians, and does not invalidate the user's responsibility to read the "User Norms" section in order to ensure the correct functioning of the product.
- The installation and repair of this product may be done by qualified and specialized technicians, to assure every procedure are carried out in accordance with applicable rules and norms. Nonprofessional and inexperienced users are expressly prohibited of taking any action, unless explicitly requested by specialized technicians to do so.
- Installations must be frequently inspected for unbalance and the wear signals of the cables, springs, hinges, wheels, supports and other mechanical assembly parts.
- Do not use the product if it is necessary repair or adjustment is required.
- When performing maintenance, cleaning and replacement of parts, the product must be disconnected from power supply. Also including any operation that requires opening the product cover.
- The use, cleaning and maintenance of this product may be carried out by any persons aged eight years old and over and persons whose physical, sensorial or mental capacities are lower, or by persons without any knowledge of the product, provided that these are supervision and instructions given by persons with experienced in terms of usage of the product in a safe manner and who understands the risks and dangers involved.
- Children shouldn't play with the product or opening devices to avoid the motorized door or gate from being triggered involuntarily.
- If the power cable is damaged, it must be replaced by the manufacturer, after-sales service or similarly qualified personnel to avoid danger.
- The device must be disconnected from the electrical network when removing the battery.
- Ensure that blocking is avoided between the actuated part and its fixed parts due to the opening movement of the actuated part.

WARNINGS FOR TECHNICIANS

- Before beginning the installation procedures, make sure that you have all the devices and materials necessary to complete the installation of the product.
- You should note your Protection Index (IP) and operating temperature to ensure that is suitable for the installation site.
- Provide the manual of the product to the user and let them know how to handle it in an emergency.
- If the automatism is installed on a gate with a pedestrian door, a door locking mechanism must be installed while the gate is in motion.
- Do not install the product "upside down" or supported by elements do not support its weight. If necessary, add brackets at strategic points to ensure the safety of the automatism.
- Do not install the product in explosive site.
- Safety devices must protect the possible crushing, cutting, transport and danger areas of the motorized door or gate.
- Verify that the elements to be automated (gates, door, windows, blinds, etc.) are in perfect function, aligned and level. Also verify if the necessary mechanical stops are in the appropriate places.
- The control board must be installed on a safe place of any fluid (rain, moisture, etc.), dust and pests.
- You must route the various electrical cables through protective tubes, to protect them against mechanical exertions, essentially on

the power supply cable. Please note that all the cables must enter the control board from the bottom.

- If the automatism is to be installed at a height of more than 2,5m from the ground or other level of access, the minimum safety and health requirements for the use of work equipment workers at the work of Directive 2009/104/CE of European Parliament and of the Council of 16 September 2009.
- Attach the permanent label for the manual release as close as possible to the release mechanism.
- Disconnect means, such as a switch or circuit breaker on the electrical panel, must be provided on the product's fixed power supply leads in accordance with the installation rules.
- If the product to be installed requires power supply of 230Vac or 110Vac, ensure that connection is to an electrical panel with ground connection.
- The product is only powered by low voltage satefy with control board (only at 24V motors).
- Parts/products weighing more than 20 kg must be handled with special care due to the risk of injury. It is recommended to use suitable auxiliary systems for moving or lifting heavy objects.
- Pay special attention to the danger of falling objects or uncontrolled movement of doors/gates during the installation or operation of this product.

WARNINGS FOR USERS

- Keep this manual in a safe place to be consulted whenever necessary.
- If the product has contact with fluids without being prepared, it must immediately disconnect from the power supply to avoid short circuits, and consult a specialized technician.
- Ensure that technician has provided you the product manual and informed you how to handle the product in an emergency.
- If the system requires any repair or modification, unlock the automatism, turn off the power and do not use it until all safety conditions have been met.
- In the event of tripping of circuits breakers of fuse failure, locate the malfunction and solve it before resetting the circuit breaker or replacing the fuse. If the malfunction is not repairable by consult this manual, contact a technician.
- Keep the operation area of the motorized gate free while the gate in in motion, and do not create strength to the gate movement.
- Do not perform any operation on mechanical elements or hinges if the product is in motion.

RESPONSABILITY

- Supplier disclaims any liability if:
  - Product failure or deformation result from improper installation use or maintenance!
  - Safety norms are not followed in the installation, use and maintenance of the product.
  - Instructions in this manual are not followed.
  - Damaged is caused by unauthorized modifications
  - In these cases, the warranty is voided.

MOTORLINE ELECTROCELOS SA.
Travessa do Sobreiro, nº29
4755-474 Rio Côvo (Santa Eugénia)
Barcelos, Portugal

SYMBOLS LEGEND:

- Important safety notices

- Potentiometer information

- Useful information

- Connectors information

- Programming information

- Buttons information

02. PACKAGE

INSIDE PACKAGE

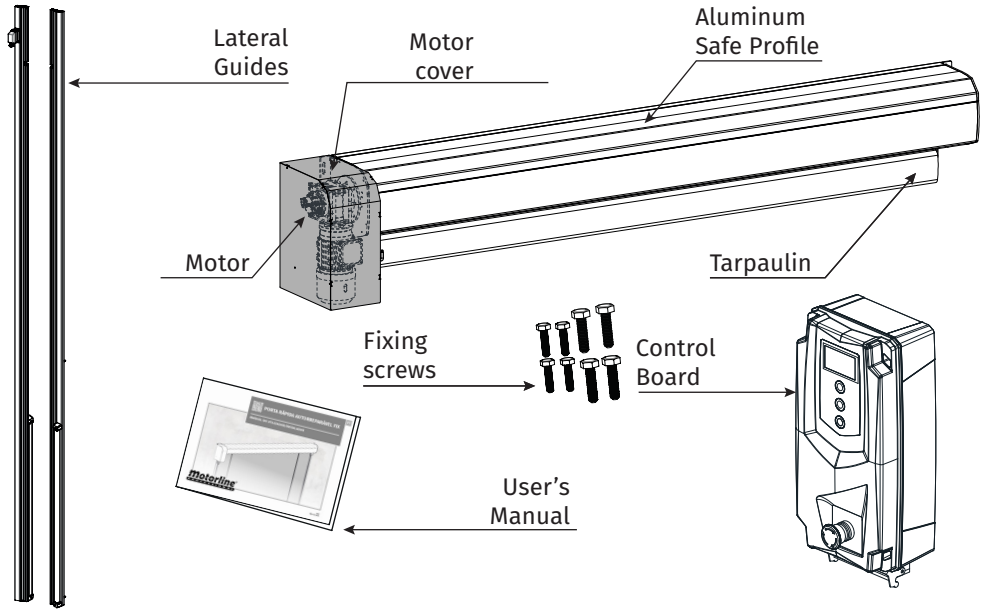

TECHNICAL SPECIFICATIONS

The **Self-Repairing Rapid Door FIX** is built with its own white lacquered aluminum profiles.
It is certified to **IP23** protection level.

MOTOR	750W	1500W
• Power supply	230V 50Hz	230V 50Hz
• Power	750W	1500W
• Rotational speed	140 (±)	100 (±)
• Force	45 Nm	130 Nm
• Opening speed *	845mm/s to 1280mm/s	
• Reduction	1:15	
• Operating temperature	-25°C to 55°C	
• Noise	≤ 60dB	
• Protection class	IP23	
• Working frequency	55%	
• Insulation Class	Class F	

* Speed tolerance depends on selected frequency, door weight and operating conditions.

03. AUTOMATISM

TECHNICAL SPECIFICATIONS

TARPAULIN	FIX	FIX TERMO *
• Yarn	2 x 1100 dtex PES HT	-
• Weight	900 g/m²	1250 g/m²
• Tensile strength	400/400 daN/5 cm	230/220 daN/5 cm
• Tear resistance	45/45 daN	23/23 daN
• Operating temperature	-30°C to 70°C	-
• Grip	10/10 daN/5 cm	-
• Abrasion resistance	EN ISO 5470-2 10000 cycles	-
** Non-rigid PVC coating on one side, Insulation foam on the other side*		

TARPAULIN FIX TERMO - *Heat transfer rate:*

Q = 3,6 x A x ΔT

***3,6-** Constant; **A-** Door area (e.g. 8m²); **ΔT-** Difference between inside temperature (e.g. -20°C) and outside temperature (e.g. 15°C).*

Example:

Q = 3,6 x 8m² x 35°C = 1008W (J/s)

This value means that 1008J of heat enter the freezer every second

TRANSPARENT STRIP	Up to -10°C	Above -10°C
• Thickness	2mm	2mm
• Material	PVC	PVC
• Hardness	-	-
• Weight	-	-
• Tensile strength	-	18.59~20.90Mpa
• Tear resistance	-	10.80~12.70Mpa
• Elasticity	-	439 a 482%
• Cold cracking	-	-
• Light Passage	Yes	Yes

MANUAL OPENING/CLOSING

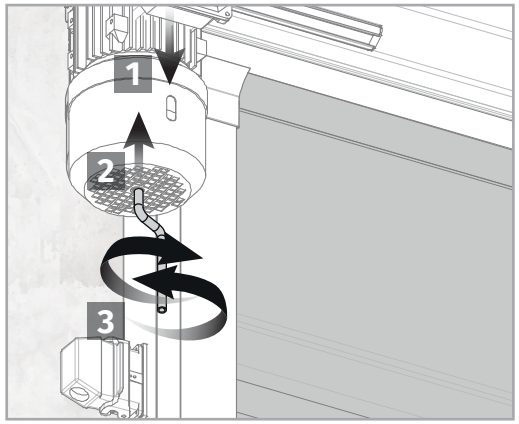

To open or close the door manually, simply pull and hold down the unlock lever and insert the crank, to turn the screw installed at the bottom of the motor (see image).

• Turning to the right will open the door and turning to the left will close.

A drill machine with 6mm hexagon tool can also be used to move it faster.

DIMENSIONS - NORMAL KIT

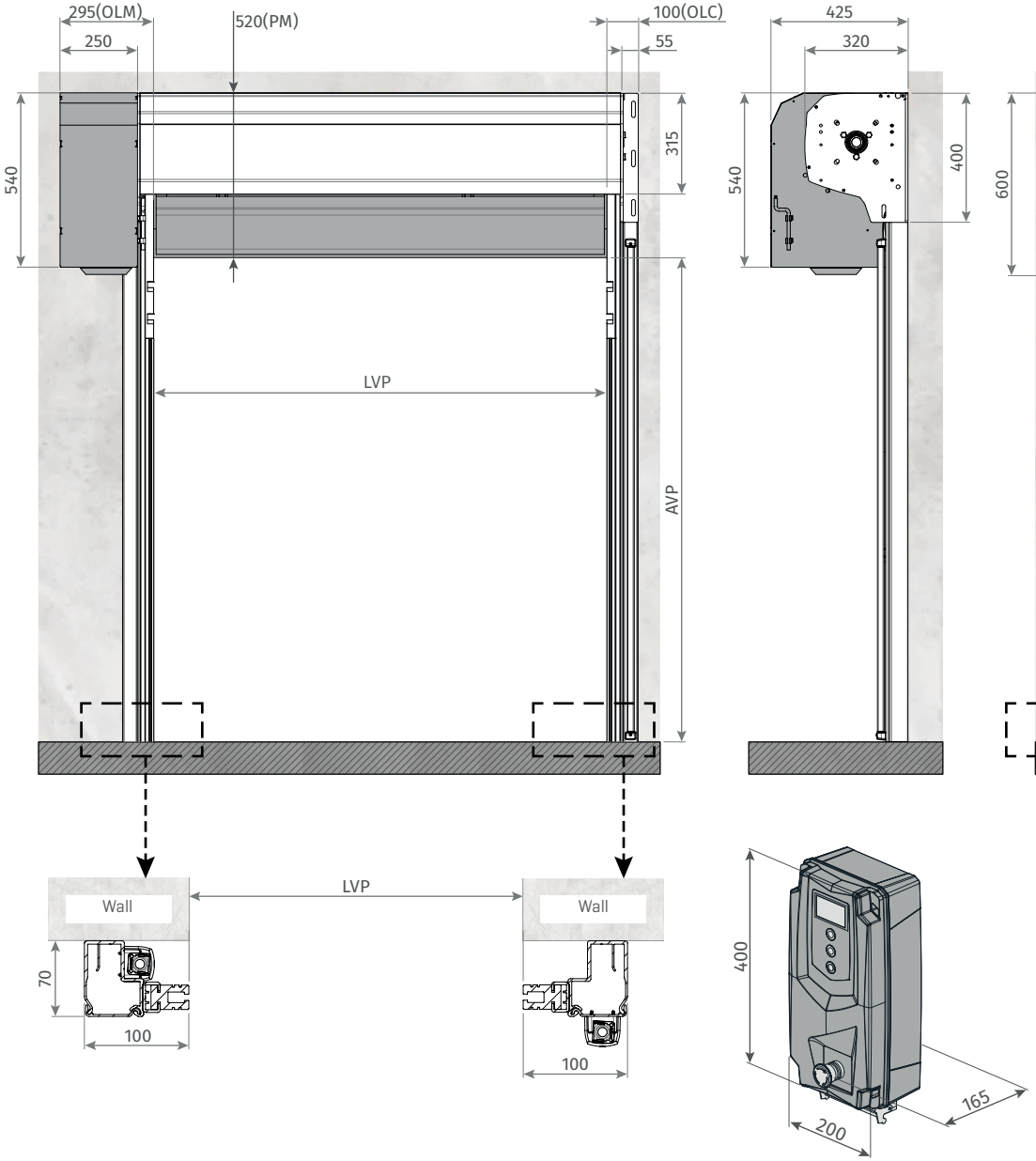

DIMENSIONS - TUNNEL KIT

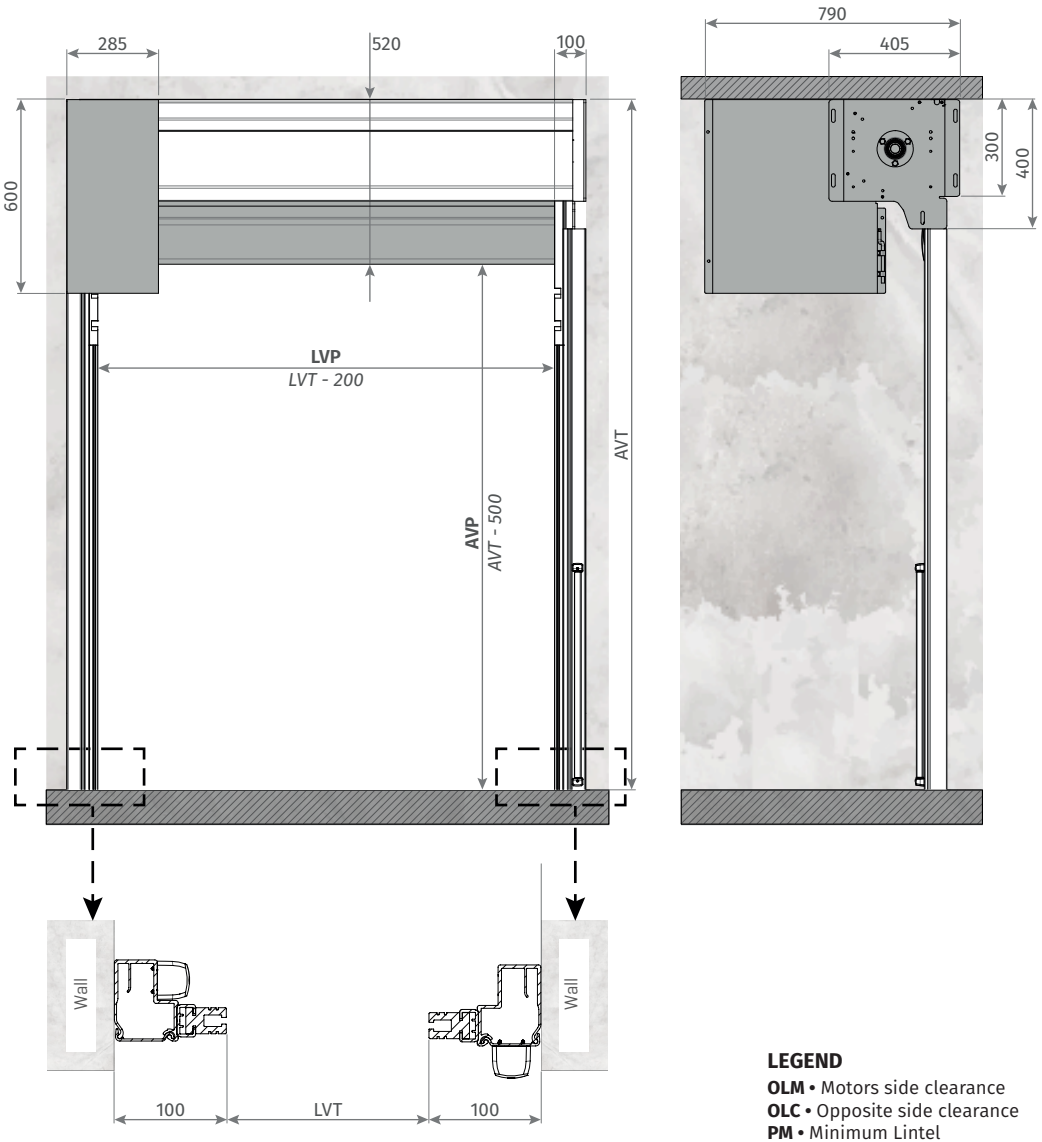

LEGEND

OLM • Motors side clearance
OLC • Opposite side clearance
PM • Minimum Lintel
LVP • Width of passageway
LVT • Overall width of passageway
AVP • Height of passageway

Dimensions shown in mm.

04. INSTALLATION

INSTALLATION MAP

1 • Aluminum safe profile
2 • Lateral Guides
3 • Motor cover
4 • Tarpaulin
5 • Control Board
6 • Safe profile
7 • Motor
8 • Connector Connections
9 • Motor unlock lever
10 • Up button
11 • STOP button
12 • Down button
13 • Emergency stop
14 • Photocell fixation plate
15 • Photocell
16 • Photocell column
17 • Strap

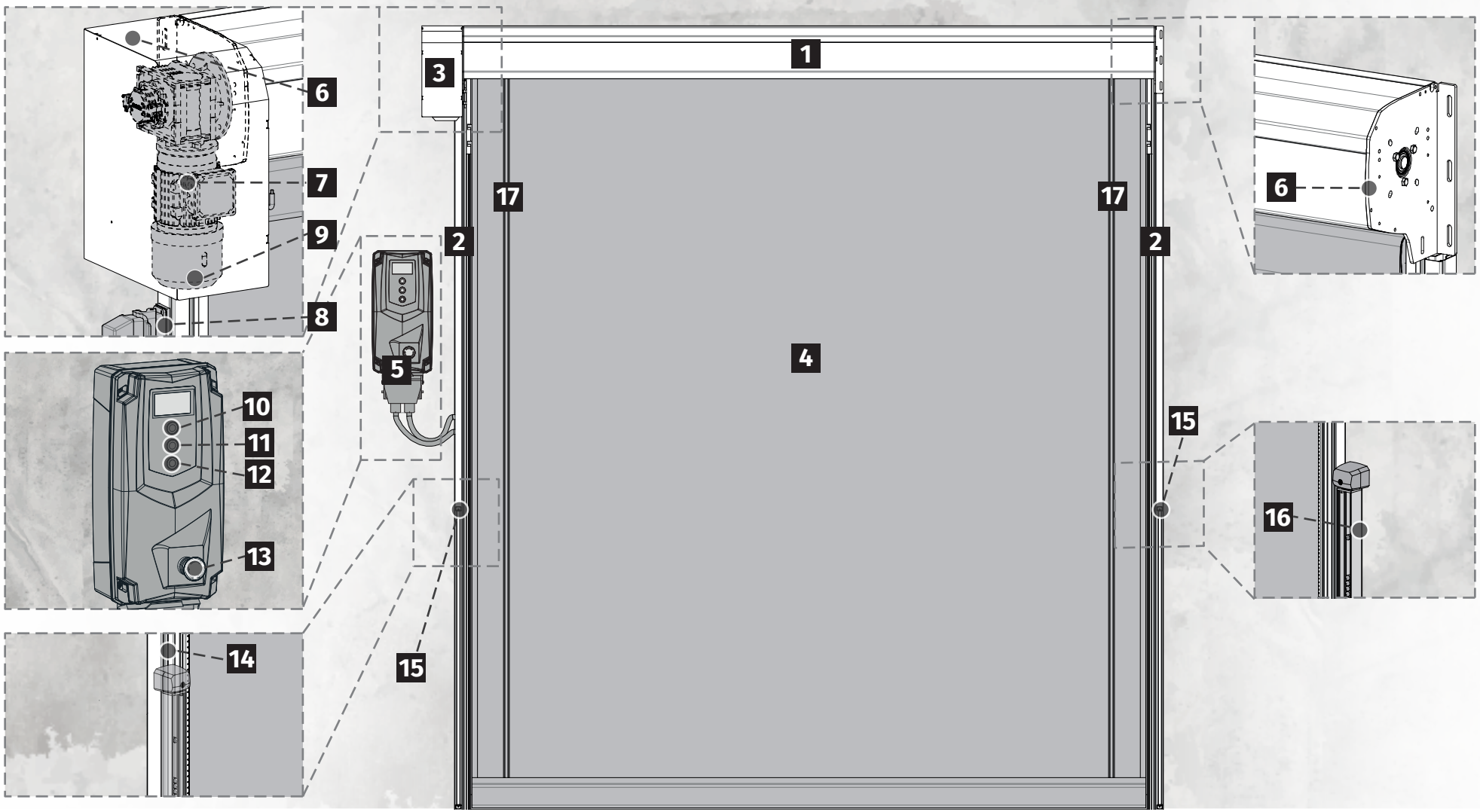

04. INSTALLATION

SAFE PROFILE FIXATION

Check the height of the lateral guides in order to respect the measures required for installation.

Use the corresponding measurements on pg. 5A on pg. 5B.

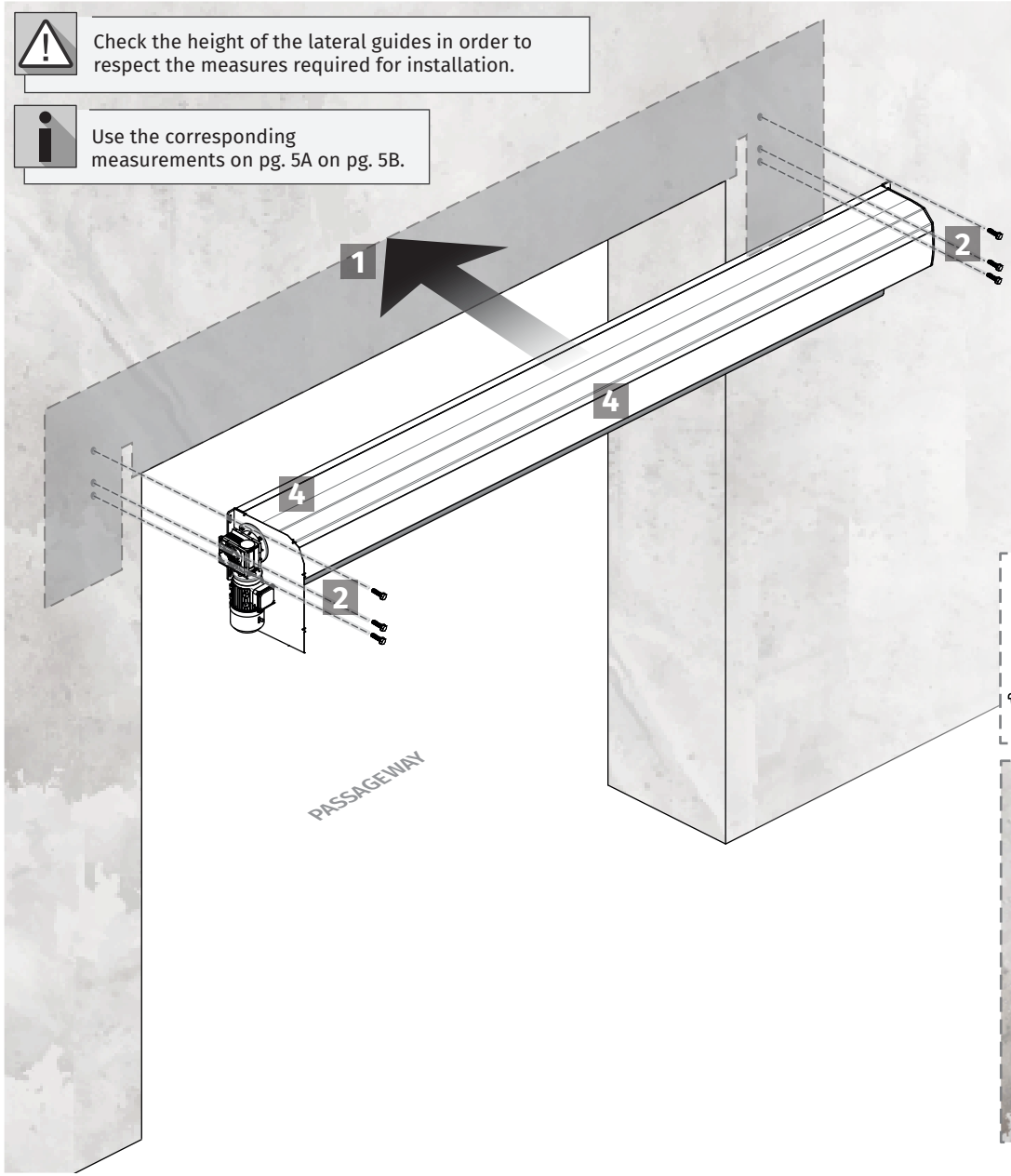

1 POSITIONING SAFE PROFILE

Apply the safe profile to the wall of the installation location, paying attention to horizontal leveling and the lintel

The safe profile should be centered with the passageway. Based on the holes in the support plates, mark the locations for drilling. Safe profile completely leaning against the walls and ceiling.

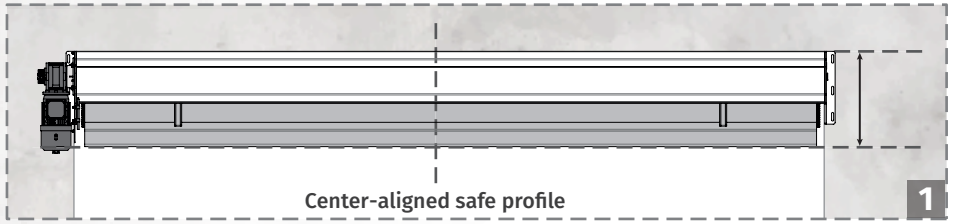

2 FIX SAFE PROFILE

Drill the holes at the marked locations, and then apply the safe profile to the wall, fixing it with dowels and screws, suitable to the installation place.

The safe profile must be securely fixed to prevent accidents.

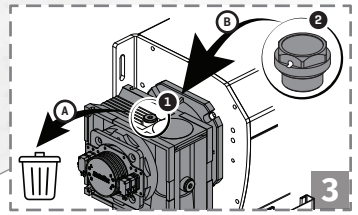

3 CHANGE THE PLUG

After the installation is complete, you must:

A - Remove the motor plug facing upwards (1)

B - Apply the breather plug (2), supplied with the motoreducer

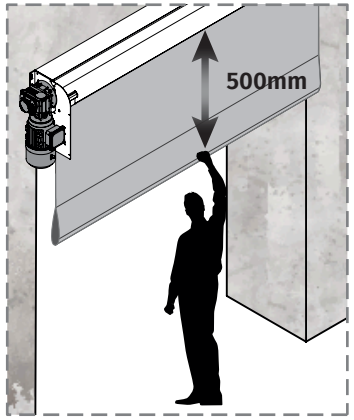

4 ADJUST TARPAULIN

Unlock the motor and pull the tarpaulin by hand about **500mm** (page 4B).

04. INSTALLATION

LATERAL GUIDES AND CONTROL BOARD FIXATION

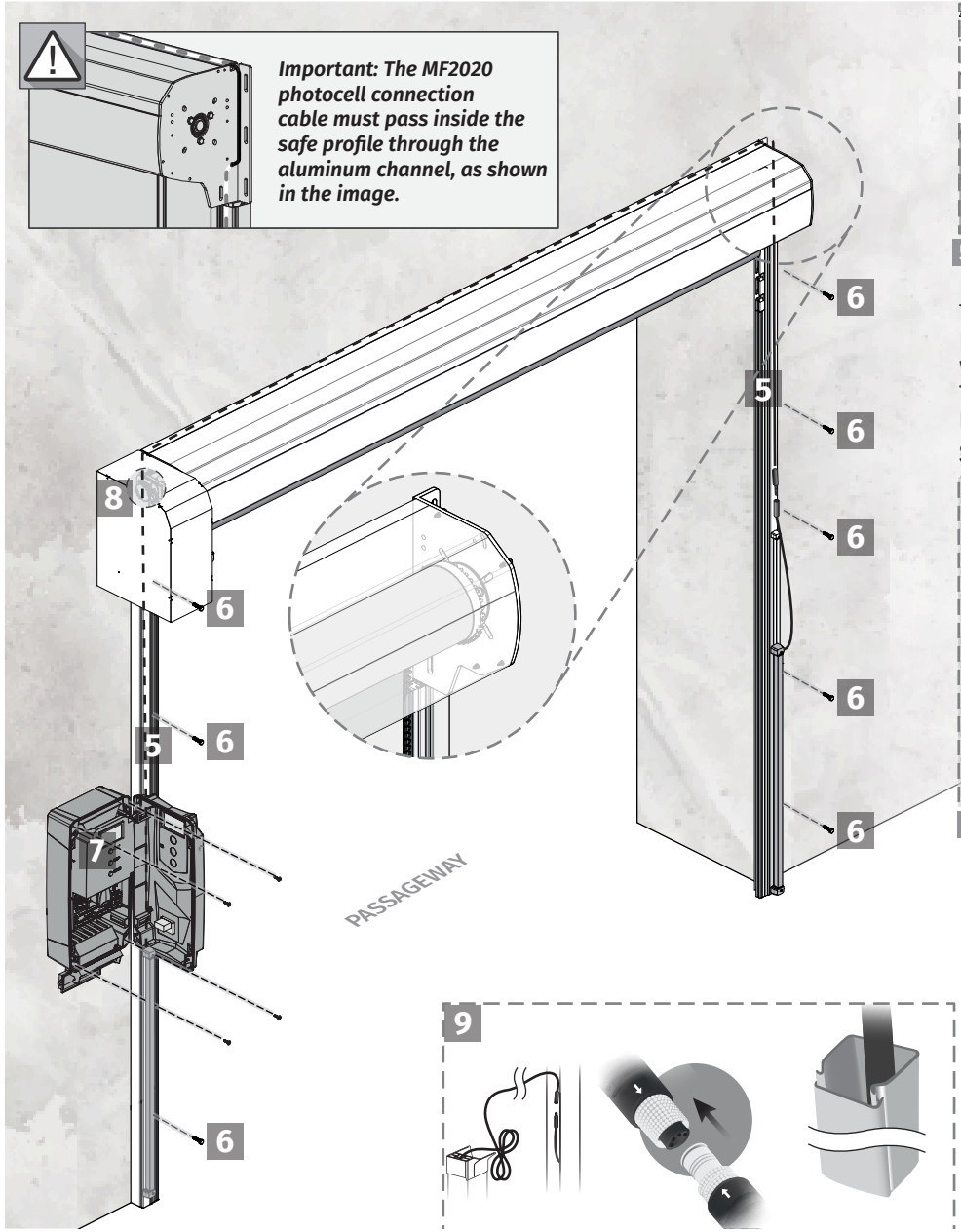

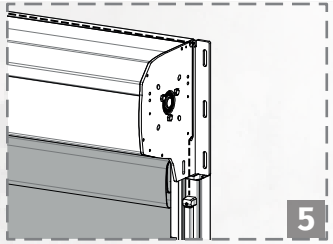

5 APPLY LATERAL GUIDES
Place the lateral guides by placing them on the inside of the support plates and leaning against the wall.
The tarpaulin must be inside the lateral guides so that it can always go up and down inside.

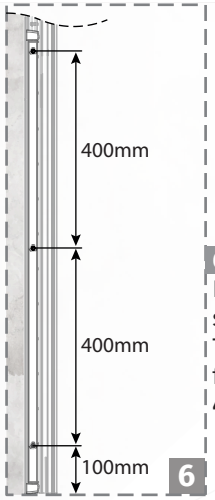

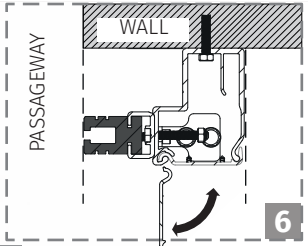

6 FIX LATERAL GUIDES TO THE WALL
Fix the guides to the support plates with screws.
The first screw should be applied **100mm** from the ground and the remaining one from **400** to **400mm**.

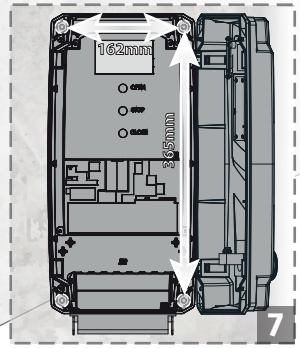

7 FIX CONTROL BOARD
Determine the location for fixing the control board and fix it to the wall.

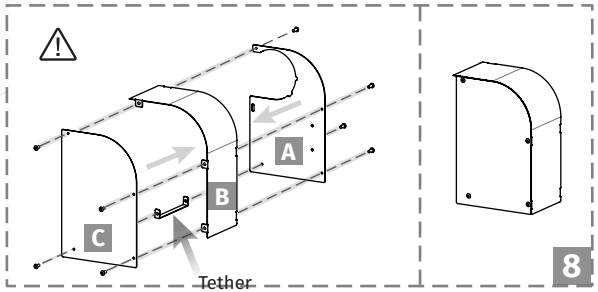

8 PLACE MOTOR COVER
⚠ First, adjust the limit switch (see page 12).
8.1 Fasten plate **B** to plate **A**.
8.2 Attach the tether to plate **A**.
8.3 Attach plate **C** to plate **B** and the tether.
8.4 Tighten the 2 screws at the top of the cover.

9 CONNECTION MF2020 PLUG
Connect the RX cable (control board side) to the TX cable on the opposite side.
When connecting, the arrows indicated on the cables must face each other.
Note: We recommend using a cable truncking along the route you choose for the cable.

Consult the product manual for more detailed information on installation and adjustments of the **MF2020** photocells.

04. INSTALLATION

SAFE PROFILE FIXATION - TUNNEL KIT

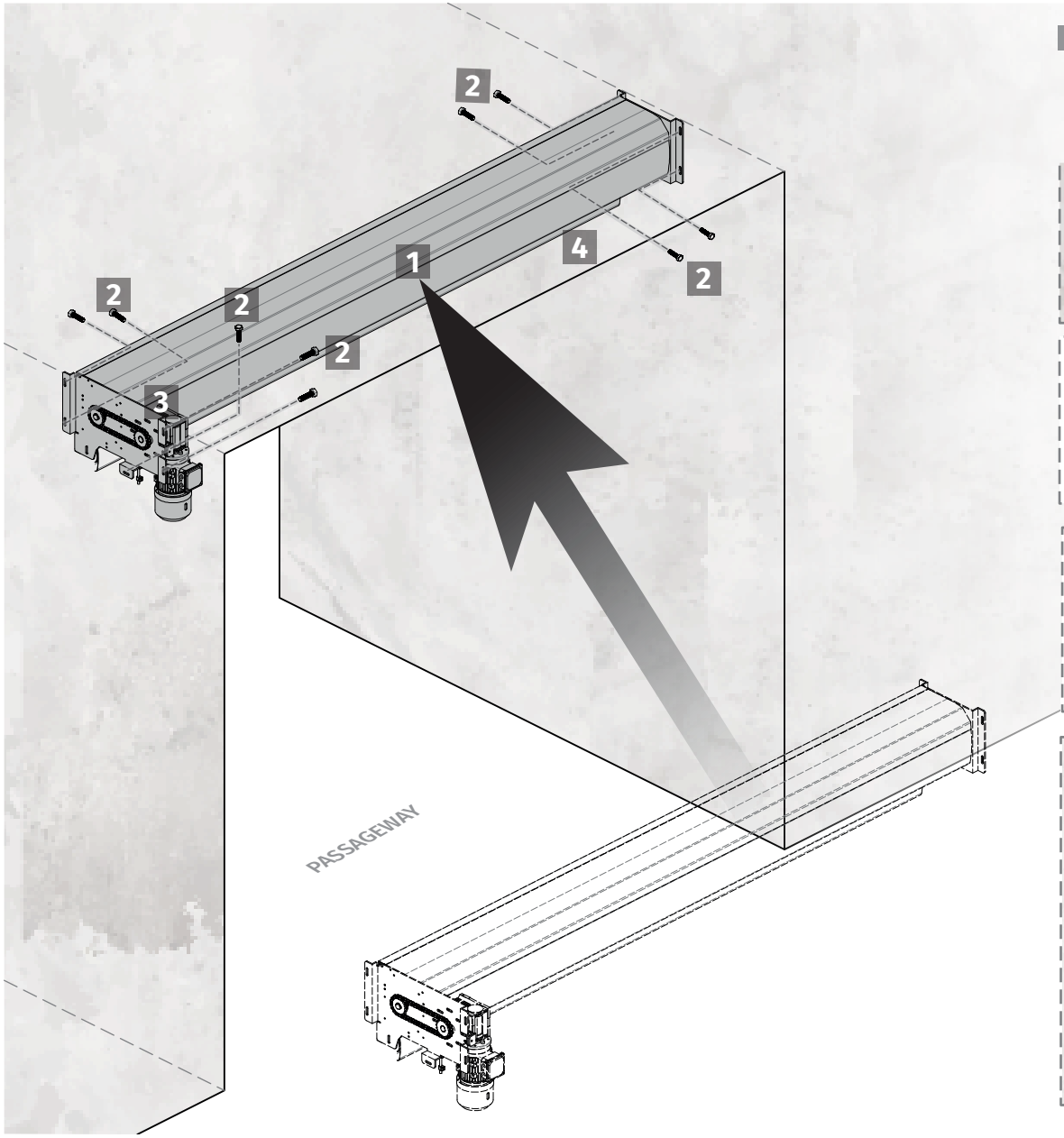

1 POSITION SAFE PROFILE
Insert the safe profile into the tunnel and apply at the desired location for installation, taking into account the horizontal leveling.
Based on the holes in the support plates, mark the locations for drilling.

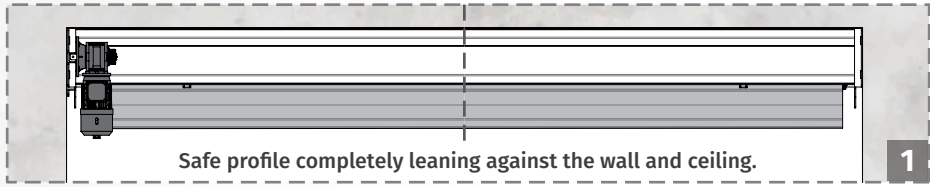

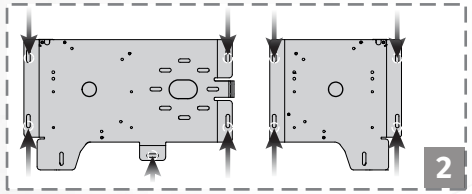

2 FIX SAFE PROFILE
Drill the holes at the marked locations, and then apply the safe profile to the wall, fixing it with dowels and screws.
The safe profile must be securely fastened to prevent accidents.

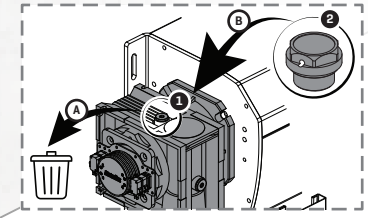

3 CHANGE THE PLUG
After the installation is complete, you must:
A - Remove the motor plug facing upwards (1)
B - Apply the breather plug (2), supplied with the motoreducer

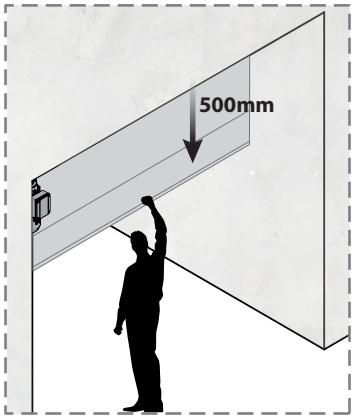

4 ADJUST TARPAULIN
Unlock the motor and pull the tarpaulin by hand about **500mm** (page 4B).

LATERAL GUIDES AND CONTROL BOARD FIXATION - TUNNEL KIT

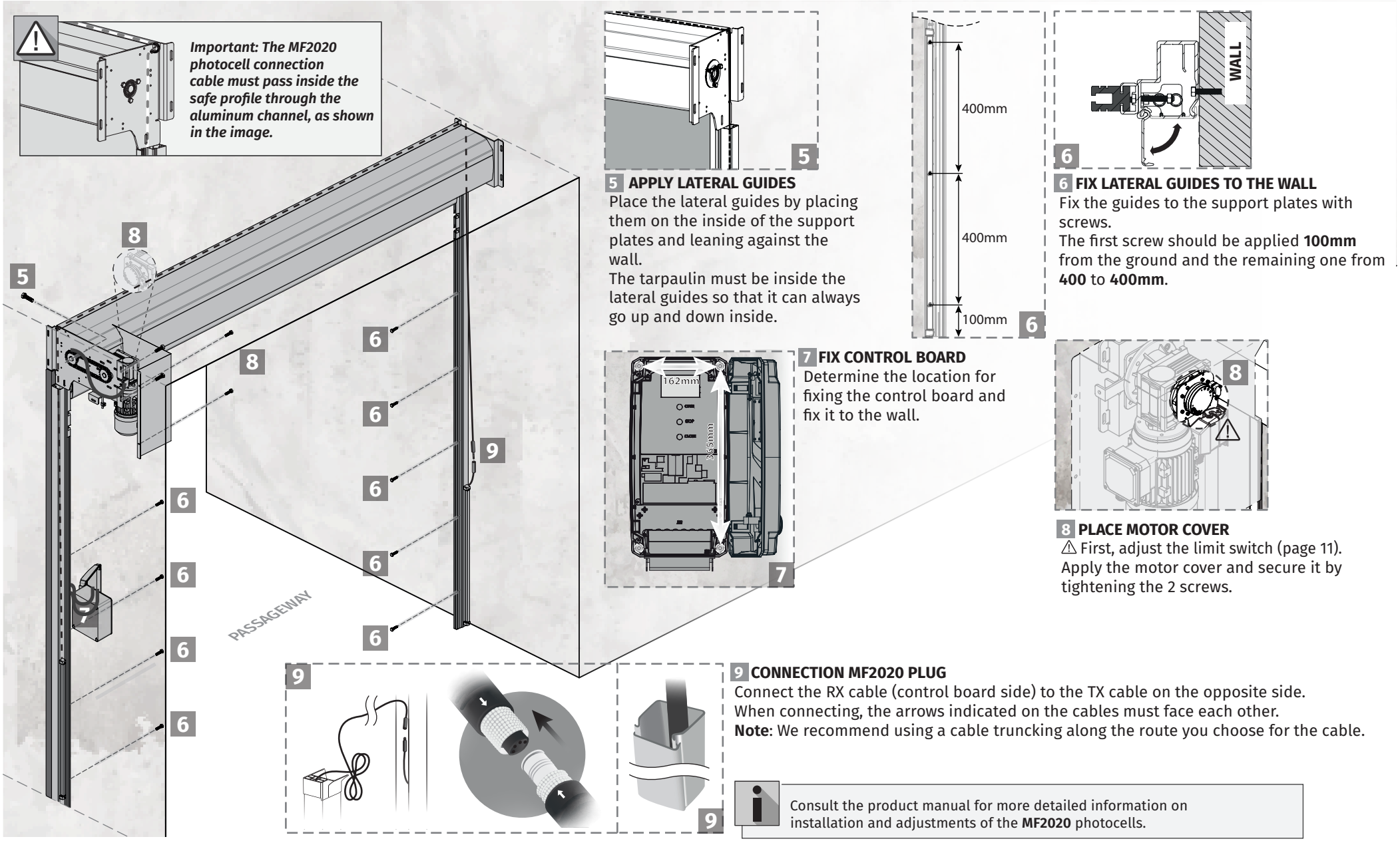

5 APPLY LATERAL GUIDES
Place the lateral guides by placing them on the inside of the support plates and leaning against the wall.
The tarpaulin must be inside the lateral guides so that it can always go up and down inside.

6 FIX LATERAL GUIDES TO THE WALL
Fix the guides to the support plates with screws.
The first screw should be applied **100mm** from the ground and the remaining one from **400** to **400mm**.

7 FIX CONTROL BOARD
Determine the location for fixing the control board and fix it to the wall.

8 PLACE MOTOR COVER
⚠ First, adjust the limit switch (page 11).
Apply the motor cover and secure it by tightening the 2 screws.

9 CONNECTION MF2020 PLUG
Connect the RX cable (control board side) to the TX cable on the opposite side.
When connecting, the arrows indicated on the cables must face each other.
Note: We recommend using a cable truncking along the route you choose for the cable.

Consult the product manual for more detailed information on installation and adjustments of the **MF2020** photocells.

05. LIMIT-SWITCHES

LIMIT-SWITCHES ADJUSTMENT

• ADJUSTMENT

The ring **4** should activate the micro switch from below, and the ring **3** should activate the micro switch from above, as shown in the image below.

• CONNECTIONS

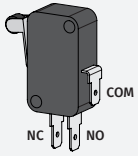

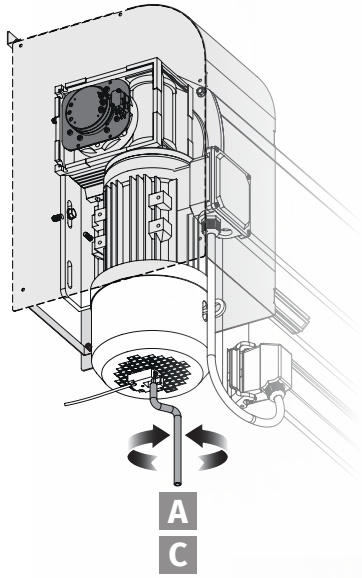

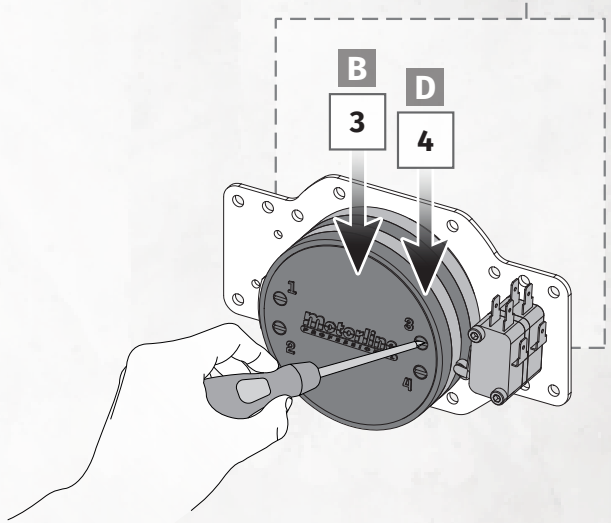

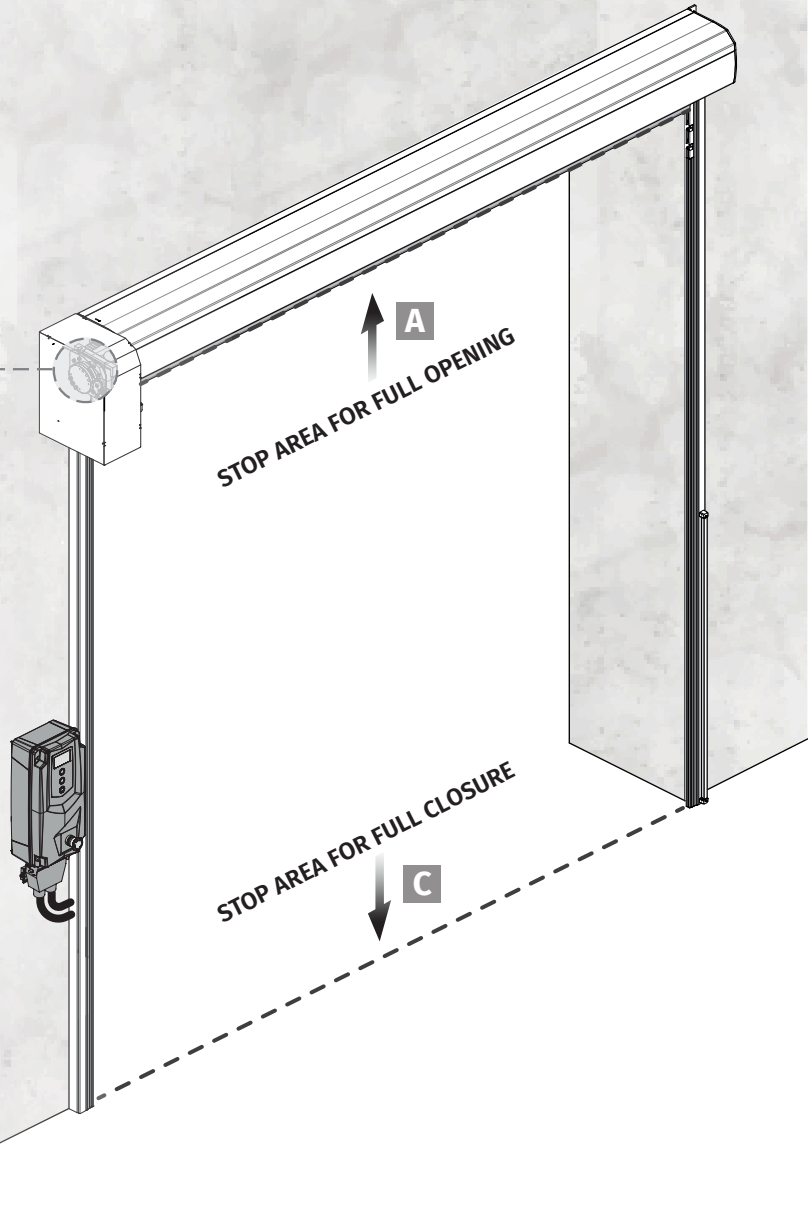

A Manually place the door in the stop area for full opening.

B Turn the adjusting screw **4** until the limit switch ring **4** activates the corresponding microswitch.

C Manually place the door in the stop area for full closure.

D Turn the adjusting screw **3** until the limit switch ring **3** activates the corresponding microswitch.

06. TROUBLESHOOTING

INSTRUCTIONS FOR CONSUMERS / TECHNICIANS

PROBLEM	CAUSE/SOLUTION	
 • OL2 appears on the screen	• This warning comes when an object hits the tarpaulin, causing it to jump out of the lateral guides	**1** • Reset **2** • Wait 15 seconds. **3** • Press **OPEN** and the tarpaulin will reattach to the lateral guides. ***or*** **1** • Turn off the circuit breaker. **2** • Wait 15 seconds. **3** • Turn it back on. **4** • Press **OPEN** and the tarpaulin will reattach to the lateral guides.
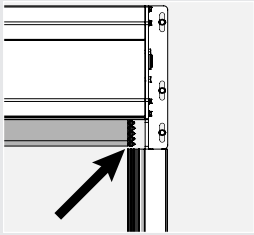 • The tarpaulin came out of lateral guides at the top	**1** • Unlock the motor (page 4B). **2** • Using the crank, lower the tarpaulin enough to be able to snap it back into the lateral guide. **3** • Direct and orient the tarpaulin so that it enters the lateral guide and works correctly again.	
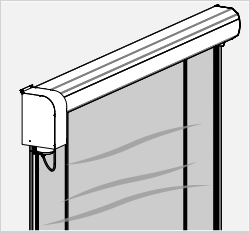 • The tarpaulin has little tension	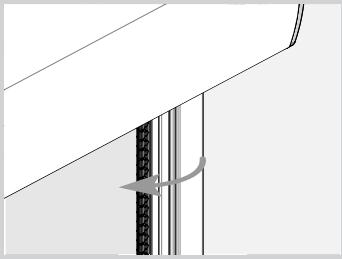 **1** • Open the guide cover (picture above). **2** • Tighten the spring bolts until you find the desired tension.	

07. MAINTENANCE

MAINTENANCE TASKS AND FREQUENCY

During maintenance/revision check the parameters mentioned below.
On the date you carry out the maintenance, mark with an "X" the tasks performed.

	Frequency (months)				Date	Date	Date	Date	Date	Date	Date
	6	12	24	36	/ /	/ /	/ /	/ /	/ /	/ /	/ /
1. MECHANICAL OPERATION											
Fastening the door to the frame		X									
Noise from scrolling points		X									
Electric brake - manual release		X									
Door speed		X									
Insect cleaning		X									
Friction points on the tarpaulin to prevent tearing		X									
Wear and tear of the anti-storm kit (if applicable)		X									
2. ELECTRICAL FUNCTIONING											
Power supply protected by circuit breaker and ground wire		X									
Cable connection		X									
Operation of photocells at idle and maximum speed		X									
Bottom security (bottom profile)		X									
Soft stop and start		X									
Advertising		X									
Label for recording the intervention		X									
CE marking label		X									
Company / Technician:											

As maintenance standards vary depending on the legislation in the country where the door is being installed, the installer must check whether the recommended maintenance frequency is correct.